PROTECTION MADE SIMPLE.

Professional Line

XUFD

GRID AND SYSTEM PROTECTION RELAY

A1 A2 N L1 L2 L3 11 12 14 21 22 24 31 32 34
5.001
OVE TOR R25 NS SYNC
ID: 802 #00
R1 R2 R3
ESC ENTER
SEG
XUFD
−
+
PROG
⊥ DI1 ⊥ DI2 ⊥ DI3 ⊥ DI4 DI5

GRID AND SYSTEM PROTECTION RELAY

Rev.: B

Original document

English

MANUAL XUFD-EN-MAN_B

Table of content

1 Safety ... 7
1.1 Intended use ... 7
1.2 Safety advice ... 7
1.3 Qualified electrician ... 8
2 Installation and connection ... 9
2.1 Dimensions and operating elements ... 9
2.2 Back-up fuse of the supply voltage ... 9
2.3 Terminal allocation ... 10
2.4 Installation on top-hat rail according to EN 60715 ... 10
2.5 Circuit diagram 1 (general, without activities for FRT) ... 11
2.6 Circuit diagram 2 (general, with activities for FRT) ... 12
2.7 Circuit diagram 3 (CEI 0-21) ... 13
2.8 Circuit diagram 4 (C10/11) ... 14
3 Function ... 15
3.1 Features ... 15
3.2 Commissioning ... 15
3.3 Functional description ... 15
3.4 Protection functions / comparators ... 16
3.4.1 Voltage monitoring ... 17
3.4.2 Frequency monitoring ... 18
3.4.3 Phase shift monitoring ... 18
3.5 Loss Of Mains (Microgrid) detection ... 18
3.5.1 Loss Of Mains (Microgrid) detection via voltage measurement ... 18
3.5.2 Loss Of Mains (Microgrid) detection via RoCoF ... 18
3.5.3 Loss Of Mains (Microgrid) detection via vector shift ... 18
3.6 Test function ... 19
3.7 Digital inputs ... 19
3.8 Output relays R1, R2 and R3 ... 19
3.9 Error ... 20
3.9.1 Measurement error ... 20
3.9.2 System error ... 20
3.9.3 Error memory (LOG) ... 20
3.10 Changes of country-specific parameter sets ... 21
3.10.1 VDE-AR-N 4105:2018 ... 21
3.10.2 C10/11:2021 ... 22
3.10.3 EN50549-1/2:2019 (default Netherlands) ... 23
3.10.4 Open Setup ... 23
4 Operation and commissioning ... 24
4.1 Initial commissioning ... 24
4.2 Menu navigation ... 24
4.2.1 Level 0 ... 24
4.2.2 Level 1 ... 24
4.2.3 Level 2 ... 25
4.2.4 Level 3 ... 25
4.2.5 Level 4 ... 25
4.2.6 Level 5 ... 26
4.3 Operating menu structure ... 27
4.4 Lead seal ... 29
4.5 Use cases ... 29
4.5.1 Use of voltage transformers in medium voltage networks (OVE TOR R25, OOE TOR R25) ... 29

4.5.2 FRT (Fault Ride Through) capability of generators: 30
4.5.3 Self-retention for remote shutdown with manual reset 32
4.5.4 Connection of a load management device for power reduction 0% 32
4.6 Supply circuit 32
4.7 Measuring circuit 33
4.8 Measuring ranges 33
4.9 Digital inputs 33
4.10 Output circuit 33
4.11 Accuracy 33
4.12 Insulation data 34
4.13 Environmental conditions 34
4.14 Electrical connection 34
4.15 Sealing wire 34
4.16 Protection class 34
5 Settings of the implemented configurations 35
5.1.1 Connection Modes 35
5.1.2 Units 35
5.1.3 Functional safety 35
5.1.4 Operational mode 35
5.1.5 Thresholds 35
5.1.6 Times 35
5.1.7 Auxiliary contact 36
5.1.8 Ranges 36
6 Safety concept 37
7 Glossary 38
8 Available Standards 39
8.1 Currently Valid Standards 39
8.2 Recertified / Obsolete Standards 43
9 Overview of the implemented configurations 44
9.1 OVE TOR R25 NS SYNC (Type A/B low voltage for sync. generators) 44
9.2 OVE TOR R25 NS ASYNC (Type A/B low voltage for async. generators) 44
9.3 OVE TOR R25 MS SYNC (Type A/B medium voltage for sync. generators) 44
9.4 OVE TOR R25 MS ASYNC (Type A/B medium voltage for async. generators) 44
9.5 OOE TOR R25 NS SYNC (Type A/B low voltage for sync. generators) 45
9.6 OOE TOR R25 NS ASYNC (Type A/B low voltage for async. generators) 45
9.7 OOE TOR R25 MS SYNC (Type A/B medium voltage for sync. generators) 45
9.8 OOE TOR R25 MS ASYNC (Type A/B medium voltage for async. generators) 45
9.9 W TOR R25 NS SYNC (Type A/B low voltage for sync. generators) 46
9.10 W TOR R25 NS ASYNC (Type A/B low voltage for async. generators) 46
9.11 W TOR R25 MS SYNC (Type A/B medium voltage for sync. generators) 46
9.12 W TOR R25 MS ASYNC (Type A/B medium voltage for async. generators) 46
9.13 TIROL TOR NS SYNC (Type A/B low voltage for sync. generators) 47
9.14 TIROL TOR NS ASYNC (Type A/B low voltage for async. generators) 47
9.15 TIROL TOR MS SYNC (Type A/B medium voltage for sync. generators) 47
9.16 TIROL TOR MS ASYNC (Type A/B medium voltage for async. generators) 47
9.17 VDE-AR-N 4105:2018-11 (Pn ≤ 50 kW) 48
9.18 VDE-AR-N 4105:2018-11 (Pn > 50 kW) 48
9.19 VDE-AR-N 4105:2018-11 (inverter) 48
9.20 VDE-AR-N 4110:2018-11 (tested according to TR3, evaluation report TR8) 49
9.21 CEI 0-21:2019 49

9.22 G99/1/3 LV:2018 (low voltage) ... 49
9.23 G99/1/3 HV:2018 (medium/high voltage) ... 50
9.24 G98/1/2:2018 (low voltage) ... 50
9.25 C10-11 2019 LV-IP (Interface Protection / low voltage) ... 50
9.26 C10-11 2019 LV-ASS (Automatic Separation System / low voltage) ... 51
9.27 C10-11:2019 HV-IP (Interface Protection / high voltage) ... 51
9.28 C10-11:2019 HV-ASS (Automatic Separation System /high voltage) ... 51
9.29 NA/EEA- CH 2014 Type A up to 1MW (Low Voltage) ... 52
9.30 NA/EEA-NE7 - CH 2020 Type A 800W to 250kW (Low Voltage) ... 52
9.31 NA/EEA-NE7 - CH 2020 Type B 250kW to 36MW (Low Voltage) ... 52
9.32 EN 50549-1:2019 LV (Niederlande) ... 53
9.33 EN 50549-2:2019 HV (Niederlande) ... 53
9.34 EN 50438:2013 (DK) ... 54
9.35 VDE 0126-1-1:2013 (ERDF-NOI-RES_13E Frankreich) ... 54
9.36 AB AS 4777.2:2020 ... 54
9.37 C AS 4777.2:2020 ... 55
9.38 NZS 4777.2:2020 ... 55
9.39 NRS 097-2-1: 2017 ... 56
9.40 OPEN SETUP ... 56
9.41 EN 50438:2013 ... 57
9.42 E 8001/8101 (predecessor of OVE TOR R25) ... 57
9.43 VDE 0124-100:2013 (predecessor of VDE-AR-N 4105:2018-11) ... 57
9.44 TR3 Rev23:2013 (predecessor of VDE-AR-N 4110:2018-11) ... 58
9.45 AS/NZS 4777.2:2015 (low voltage) ... 58
9.46 G59/3/3:2015 LV (low voltage – predecessor of G99/1/3 LV:2018) ... 58
9.47 G59/3/3:2015 MV (high voltage – predecessor of G99/1/3 HV:2018) ... 58
9.48 G83/2:2012 (low voltage – predecessor of G98/1/2:2018) ... 59
9.49 C10-11:2012 LV (low voltage – predecessor of C10-11:2019) ... 59
9.50 C10-11:2012 MV (high voltage – predecessor of C10-11:2019) ... 59
9.51 C10-11:2019 LV-IP (Interface Protection / low Voltage – predecessor of C10-11:2021) ... 59
9.52 C10-11:2019 HV-IP (Interface Protection / high Voltage – predecessor of C10-11:2021)) ... 60
10 APPENDIX (Parameters of the implemented standards in detail) ... 61
10.1 ÖVE TOR R25 NS SYNC [ID 802] Typ A/B low voltage synchr. generators ... 61
10.2 ÖVE TOR R25 NS ASYNC [ID 803] Typ A/B low voltage asynchr. generators ... 65
10.3 ÖVE TOR R25 MS SYNC [ID 852] Typ A/B medium voltage synchr. generators ... 70
10.4 ÖVE TOR R25 MS ASYNC [ID 853] Typ A/B medium voltage asynchr. generators ... 74
10.5 Oberösterreich OOE TOR R25 NS SYNC [ID 822] Typ A/B low voltage synchr. generators ... 78
10.6 Oberösterreich OOE TOR R25 NS ASYNC [ID 823] Typ A/B low voltage asynchr. generators ... 82
10.7 Oberösterreich OOE TOR R25 MS SYNC [ID 872] Typ A/B medium voltage synchr. generators ... 86
10.8 Oberösterreich OOE TOR R25 MS ASYNC [ID 873] Typ A/B med. voltage asynchr. generators ... 91
10.9 Wien TOR R25 NS SYNC [ID 832] Typ A/B low voltage synchr. generators ... 96
10.10 Wien TOR R25 NS ASYNC [ID 833] Typ A/B low voltage asynchr. generators ... 101
10.11 Wien TOR R25 MS SYNC [ID 882] Typ A/B medium voltage synchr. generators ... 106
10.12 Wien TOR R25 MS ASYNC [ID 883] Typ A/B medium voltage asynchr. generators ... 111
10.13 TIROL TOR NS SYNC [ID 812] Typ A/B low voltage synchr. generators ... 116
10.14 TIROL TOR NS ASYNC [ID 813] Typ A/B low voltage asynchr. generators ... 121
10.15 TIROL TOR MS SYNC [ID 862] Typ A/B medium voltage synchr. generators ... 126
10.16 TIROL TOR MS ASYNC [ID 863] Typ A/B medium voltage asynchr. generators ... 131
10.17 BURGENLAND TOR R25 NS SYNC [ID 842] Typ A/B low voltage synchr. generators ... 136
10.18 BURGENLAND TOR R25 NS ASYNC [ID 843] Typ A/B low voltage synchr. generators ... 141

10.19 BURGENLAND TOR R25 MS SYNC [ID 892] Typ A/B medium voltage synchr. generators 146
10.20 BURGENLAND TOR R25 MS ASYNC [ID 893] Typ A/B medium voltage asynchr. generators 151
10.21 VDE-AR-N 4105:2018 ≤50kW [ID 311] 156
10.22 VDE-AR-N 4105:2018 >50kW [ID 312] 161
10.23 VDE-AR-N 4105:2018 Umr [ID 313] 166
10.24 VDE-AR-N 4110:2018 TR3-25 [ID 707] 171
10.25 CEI 0-21:2019 [ID 102] 177
10.26 G99/1/3:2018 LV [ID 410] 183
10.27 G99/1/3:2018 HV [ID 460] 187
10.28 G98/1/2:2018 [ID 510] 191
10.29 C10-11:2021 LV-IP [ID 603] Interface Protection low voltage 195
10.30 C10-11:2019 LV-ASS [ID 602] Automatic Separation System / Low Voltage 201
10.31 C10-11:2021 HV-IP [ID 653] Interface Protection / High Voltage 206
10.32 C10-11:2019 HV-ASS [ID 652] Automatic Separation System / High Voltage 211
10.33 NA/EEA- CH 2014 [ID 1200] Low Voltage Type A up to 1MW 216
10.34 NA/EEA-NE7 - CH 2020 [ID 1220] Low Voltage Type A > 800W to ≤ 250kW 221
10.35 NA/EEA-NE7 - CH 2020 [ID 1221] Low Voltage Type B > 250kW to ≤ 36MW 227
10.36 EN50549-1:2019 LV Netherlands [ID 901] 233
10.37 EN50549-2:2019 HV Netherlands [ID 926] 241
10.38 EN50549-1:2019 LV Ireland [ID 905] 249
10.39 EN50438:2013 DK [ID 950] 257
10.40 SRPS EN 50549-1:2020 LV (Serbia) [ID 910] 262
10.41 VDE 0126-1-1:2013 [ID 200] 270
10.42 Romania ANRE 2021 [ID 1300] 275
10.43 AB AS 4777.2:2020 [ID 1110] 278
10.44 C AS 4777.2:2020 [ID 1120] 283
10.45 NSW-Augrid 23 [ID 1135] 293
10.46 NSW-Essential 23 [ID 1140] 299
10.47 NSW-Endeavour 23 [ID 1145] 305
10.48 VIC-United Energy 23 [ID 1150] 310
10.49 VIC-Ausnet Energy 23 [ID 1155] 317
10.50 VIC-Citipower 23 [ID 1160] 322
10.51 VIC-Jemana 23 [ID 1165] 328
10.52 VIC-Powercor 23 [ID 1170] 334
10.53 VIC-Western Power 23 [ID 1175] 340
10.54 ACT-Evoenergy 23 [ID 1180] 347
10.55 QLD-Energex 23 [ID 1185] 353
10.56 QLD-Ergon 23 [ID 1190] 359
10.57 SA-Power networks23 [ID 1195] 365
10.58 NRS 097-2-1:2017 [ID 1000] 371
10.59 OPEN SETUP [ID 9006] 377
10.60 CZ-2024 [ID: 930] 384
10.61 EN50549-1: SI Uf A/B [ID: 940] 392
10.62 EN50549-2: SI Uf C [ID: 945] 400
10.63 Bulgaria LV 2024 [ID: 1400] 409
10.64 Bulgaria MV 2024 [ID: 1450] 414
10.65 EN50438:2013 [ID 900] 420
10.66 OVE E8001/8101:2014 [ID 801] renewed standard 422
10.67 VDE 0124-100:2013 [ID 300] renewed standard 427
10.68 AS/NZS 4777.2:2015 [ID 1102] renewed standard 434

10.69 G59/3/3:2015 MV [ID 455] renewed standard ... 441
10.70 G83/2:2012 [ID 500] renewed standard ... 445
10.71 C10-11:2013 LV [ID 600] renewed standard ... 449
10.72 C10-11:2013 MV [ID 650] renewed standard ... 452
10.73 C10-11:2019 LV-IP [ID 601] Interface Protection low voltage ... 456
10.74 C10-11:2019 HV-IP [ID 651] Interface Protection / High Voltage... 459

1 Safety

Caution! Never work when voltage is applied.
This poses a life-threatening risk! Never use the device if there is obvious damage! Use only by trained specialist personnel!

Professional product!
This product requires special expertise for the installation!

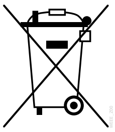

This device is subject to the Waste Electrical Equipment Regulation (WEEE) and may not be disposed of with normal domestic waste. The device is made of materials that can be recycled by specialized recycling companies. The device must be disposed of according to the national electronic scrap regulations.

1.1 Intended use

The XUFD serves as grid and system protection for supplying cogeneration units, wind power stations, hydroelectric power plants, and photovoltaic systems.

In the event of a power failure or a fault in the grid of the energy supply company, private small power plants must immediately be isolated from the public grid to prevent accidental infeed. For one, maintenance personnel could be endangered without immediate grid separation, and secondly, consumers could be exposed to impermissible voltages and frequencies.

In case the grid operator requires threshold values that deviate from the standards, it is possible in part to set some of the threshold values outside of the standard defined range.

Outside of this range the device is no longer in compliance with standards and the corresponding certificates lose their validity. This status is shown on the display by the identifier “ncnf”. Settings outside of this range are therefore within the operator's scope of responsibility and/or the acceptance authority of the system.

1.2 Safety advice

This device was built and tested under-recognized technical safety regulations. However, incorrect use can still result in danger for both persons and machines.

Only use this device as intended, in a technical safe condition, and compliance with the applicable rules and regulations for accident prevention valid at the usage location.

- Fix all faults that could impair the safety immediately.
- Do not make any unauthorized changes and only use spare parts and additional devices that are sold or expressly recommended by the manufacturer of the device.
- The device may no longer be used in case of obvious damage.
- Country-specific standards and guidelines are to be observed.
- The XUFD can be protected against authorized changes after commissioning via password protection or sealing. One of the protection mechanisms named above must be applied if this is required in the respective country-specific standard or guidelines.

1.3 Qualified electrician

A qualified electrician can independently recognize and prevent dangers from electricity. Requirements for this are:

- Knowledge of electrical engineering
- Experience in electrical work
- Knowledge and work experience with the corresponding system or similar systems (system type)
- Knowledge of the hazards and countermeasures
- The ability to recognize whether safety is provided during the performance of work

Qualified electricians are specially trained and know the relevant standards and regulations for the work environment in which they are active. The regulations of the corresponding country apply.

This publication may have been revised or updated since this copy was produced. To verify that you have the latest revision, please visit the download section of our website:

- https://docs.SEGelectronics.de/xufd

Please check this download area for the latest revision of this Technical Manual and whether there is an Errata Sheet with updated information. (The ID of every document is printed on its cover page.)

SEG Electronics GmbH offers the XUFD configuration as a service: This includes creating and setting up the device configuration for the protection in house according to customer data based on check lists.

2 Installation and connection

2.1 Dimensions and operating elements

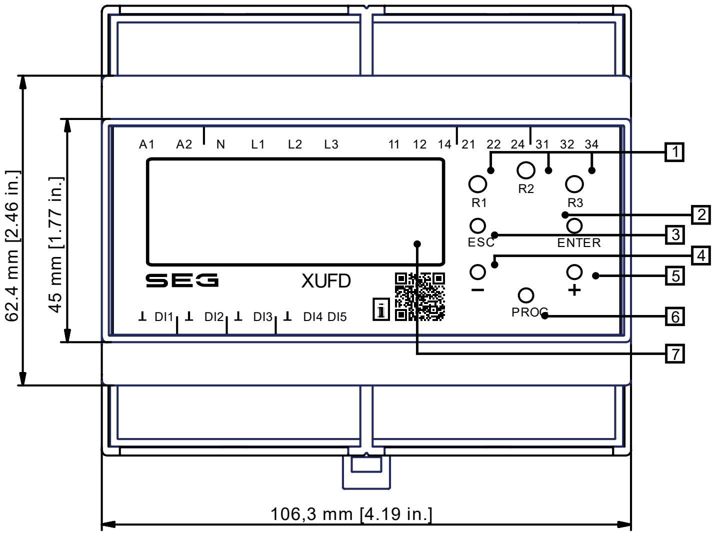
62.4 mm [2.46 in.]
45 mm [1.77 in.]
A1
A2
N
L1
L2
L3
11
12
14
21
22
24
31
32
34
R1
R2
R3
ESC
ENTER
–
+
PROG
SEG
XUFD
DI1
DI2
DI3
DI4
DI5
1
2
3
4
5
6
7
106,3 mm [4.19 in.]

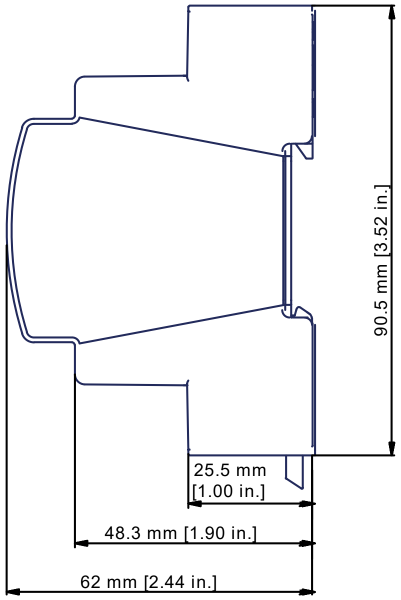
90.5 mm [3.52 in.]
25.5 mm
[1.00 in.]
48.3 mm [1.90 in.]
62 mm [2.44 in.]

Legend	Labeling	Type	Function
1	R1, R2, R3	LED (yellow)	Output relay status display
2	ENT	Button	ENTER, input confirmation, next level
3	ESC	Button	ESCAPE, input rejection, back a level, Test
4	–	Button	Parameter setting, display change
5	+	Button	Parameter setting, display change
6	PROG	Button (can be sealed)	PROGRAM, programming
7		LCD-display 4×20 characters	Display

2.2 Back-up fuse of the supply voltage

The supply and measuring voltages of all system components are to be secured with back-up fuses. The back-up fuses are to be dimensioned according to the conductor cross-section used.
We recommend securing the output relay against the danger of short-circuiting with a 5A fast-acting fuse!

2.3 Terminal allocation

A1, A2	Supply circuit	DC: 24V AC: 110 - 230V A1: L (+) A2: N (–)
L1, L2, L3, N	Measuring circuit	U_N: 3 × 400V AC
11, 12, 14	Output relay channel A (changeover contact) Status display through yellow LED R1	Contact output (isolated) 11: Root 12: normally closed (n.c.) contact 14: normally opened (n.o.) contact
21, 22, 24	Output relay channel B (changeover contact) Status display through yellow LED R2	Contact output (isolated) 21: Root 22: normally closed (n.c.) contact 24: normally opened (n.o.) contact
31, 32, 34	Output relay channel D (changeover contact) Status display through yellow LED R3	Contact output (isolated) 31: Root 32: normally closed (n.c.) contact 34: normally opened (n.o.) contact
I1, ⊥	Digital input 1 (feedback contact of contactor A)	Contact input (24 V / 5 mA) Input active: I1 and ⊥ connected (configurable)
I2, ⊥	Digital input 2 (feedback contact of contactor B)	Contact input (24 V / 5 mA) Input active: I2 and ⊥ connected (configurable) Not applicable for all country-specific standards in which no functional safety is required!
I3, ⊥	Digital input 3 (remote shutdown)	Contact input (24 V / 5 mA) Input active: I3 and ⊥ connected (configurable)
I4, I5, ⊥	Digital inputs 4 and 5 (Switchover to narrower frequency window)	For CEI 0-21 Contact input (24 V / 5 mA) Input active: I4 resp. I5 and ⊥ connected

2.4 Installation on top-hat rail according to EN 60715

Latch the mounting clip on the reverse of the device to the top-hat rail so that a safe and secure fit is ensured.

2.5 Circuit diagram 1 (general, without activities for FRT)

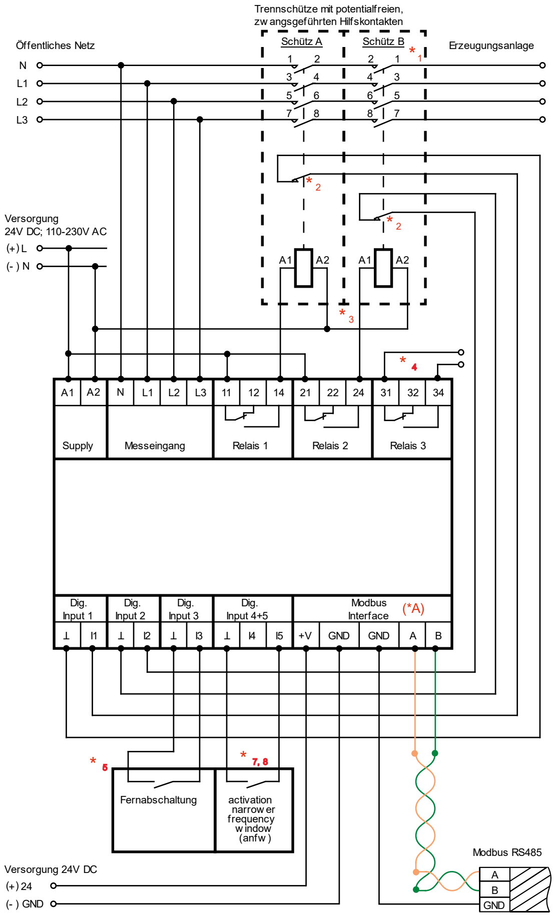
Trennschütze mit potentialfreien, zwangsgeführten Hilfskontakten
Öffentliches Netz
Schütz A
Schütz B
Erzeugungsanlage
N
L1
L2
L3
*1
*2
*3
*4
Versorgung 24V DC; 110-230V AC
(+) L
(-) N
A1
A2
A1 A2 N L1 L2 L3 11 12 14 21 22 24 31 32 34
Supply
Messeingang
Relais 1
Relais 2
Relais 3
Dig. Input 1
Dig. Input 2
Dig. Input 3
Dig. Input 4+5
Modbus Interface
(*A)
⊥ I1 ⊥ I2 ⊥ I3 ⊥ I4 I5 +V GND GND A B
*5
*7, 8
Fernabschaltung
activation narrower frequency window (anfw)
Modbus RS485
A
B
GND
Versorgung 24V DC
(+) 24
(-) GND

To be used for:

Actual standards

OVE TOR R25 NS SYNC, OOE TOR R25 NS SYNC
OVE TOR R25 NS ASYNC, OOE TOR R25 NS ASYNC
OVE TOR R25 MS SYNC, OOE TOR R25 MS SYNC
OVE TOR R25 MS ASYNC, OOE TOR R25 MS ASYNC
W TOR R25 NS/MS SYNC, W TOR R25 NS/MS ASYNC
TIROL TOR NS/MS SYNC, TIROL TOR NS/MS ASYNC
BURGENLAND TOR NS/MS A/SYNC
VDE-AR-N 4105:2018-11 (Pn ≤ 50 kW) *1, *4, *5
VDE-AR-N 4105:2018-11 (Pn > 50 kW) *1, *4, *5
VDE-AR-N 4105:2018-11 (Inverter) *4, *5
VDE-AR-N 4110:2018-11 *1
G99-1-3 LV:2018 *1
G99-1-3 HV:2018 *1
G98-1-2:2018 *1
C10-11:2019 LV-ASS *1, *4
C10-11:2019 HV-ASS *1, *4
EN50549-1:2019 LV
EN50549-2:2019 HV
EN50438:2013 DK *3
VDE 0126-1-1:2013
Romania ARNE 2021
AS/NZS 4777.2:2020
NRS 097-2-1:2017
OPEN SETUP *3

Recertified standards

EN50438:2013
OVE E 8001-4-712 / E 8101-4-712
VDE 0124-100:2013
TR3 Rev23:2013 *1
AS/NZS 4777.2:2015
G59/3/3:2015 LV *1
G59/3/3:2015 MV *1
G83/2:2012 *1
C10-11:2012 LV *1
C10-11:2012 MV *1
C10-11:2019 LV-IP *1, *4

*1 ... Contactor B not applicable for all country-specific standards in which no functional safety is required!
*2 ... Auxiliary contact as normally opened, normally closed, or can be configured "not monitored”.
*3 ... 1- or 2-channel connection possible and can be configured.
*4 ... Evaluation, contact error for autogeneration plants only for VDE-AR-N 4105:2018-11 and C10-11:2019
*5 ... VDE-AR-N 4105:2018-11 FRT (fault ride through) behavior with buffered isolation contactors.

2.6 Circuit diagram 2 (general, with activities for FRT)

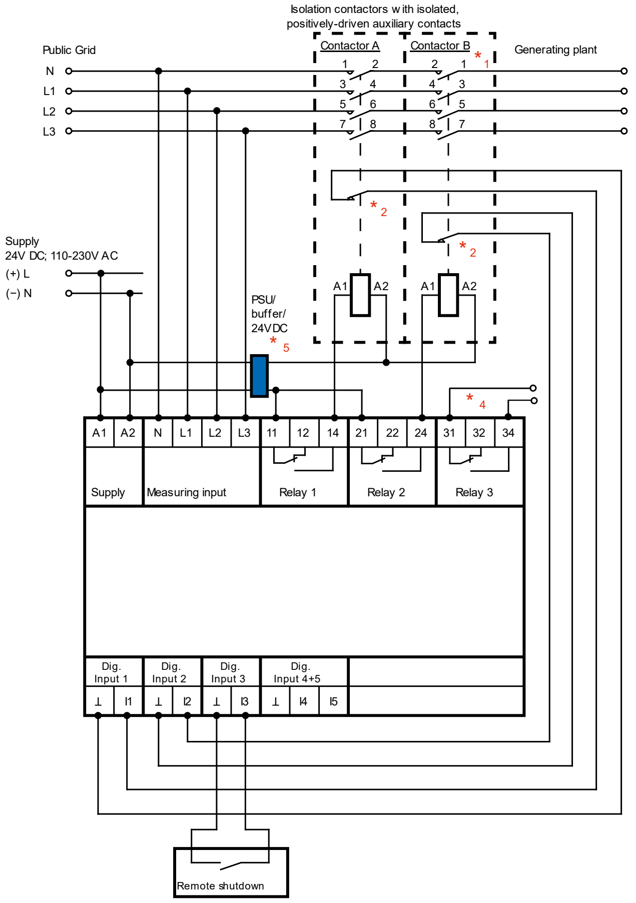
Isolation contactors with isolated, positively-driven auxiliary contacts
Contactor A
Contactor B
$*_1$
Public Grid
Generating plant
N
L1
L2
L3
1
2
3
4
5
6
7
8
$*_2$
Supply
24V DC; 110-230V AC
(+) L
(−) N
PSU/
buffer/
24VDC
$*_5$
A1
A2
$*_4$
A1
A2
N
L1
L2
L3
11
12
14
21
22
24
31
32
34
Supply
Measuring input
Relay 1
Relay 2
Relay 3
Dig. Input 1
Dig. Input 2
Dig. Input 3
Dig. Input 4+5
⊥
I1
I2
I3
I4
I5
Remote shutdown

To be used for:

Standards as described in chapter 2.5

$*_5$ *FRT (fault ride through) behavior with buffered isolation contactors*

Power supply / buffer. Isolation contactors and coupling relays, if present, must be buffered for 3s/0.3s in the event of undervoltage (FRT).

Power generation devices into low-voltage networks must help to stabilize the network. Therefore, the isolating contactor must not drop out at a voltage just above U << (0.45 Un) or 0.3s in the event of a voltage interruption due to undervoltage. Only the XUFD switches the contactor off after 3s (U <) or 0.3s (U <<). A power supply / buffer is required.

When using 2 isolating contactors, both must be supplied for 3 s. The XUFD has an internal broadband power supply and therefore does not need a buffered control voltage.

ATTENTION with signal sequence: Buffer – XUFD – isolating contactor. The control signal must NOT be delayed!

$*_1$ … Contactor B not applicable for all country-specific standards in which no functional safety is required!
$*_2$ … Auxiliary contact as normally opened, normally closed, or can be configured “not monitored”.
$*_3$ … 1- or 2-channel connection possible and can be configured.
$*_4$ … Evaluation, contact error for autogeneration plants only for VDE-AR-N 4105:2018-11 and C10-11:2019
$*_5$ … VDE-AR-N 4105:2018-11 FRT (fault ride through) behavior with buffered isolation contactors.

2.7 Circuit diagram 3 (CEI 0-21)

To be used for:

CEI 0-21:2019

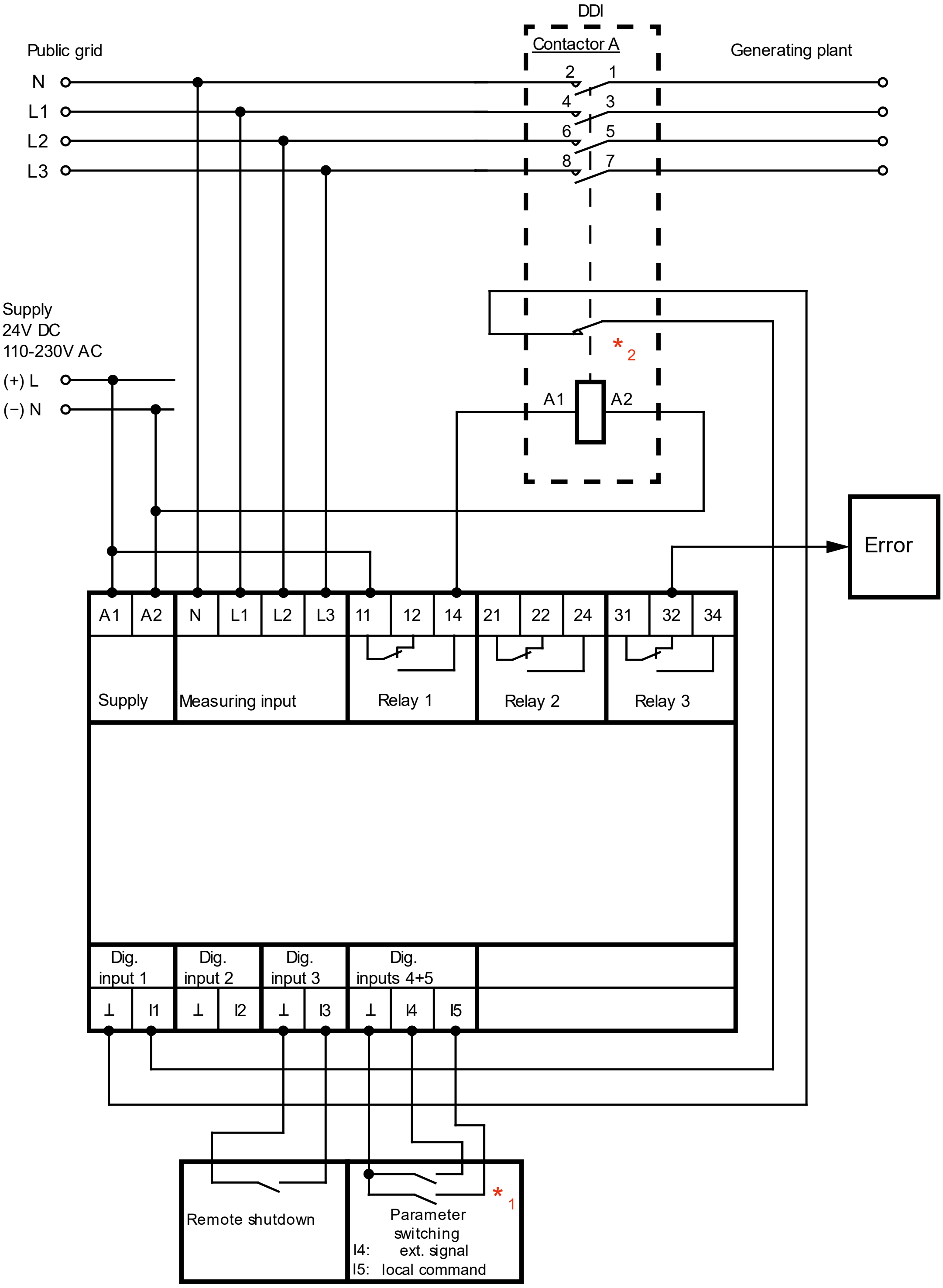
DDI
Contactor A
Public grid
Generating plant
N
L1
L2
L3
2
1
4
3
6
5
8
7
Supply
24V DC
110-230V AC
(+) L
(−) N
*2
A1
A2
Error
A1
A2
N
L1
L2
L3
11
12
14
21
22
24
31
32
34
Supply
Measuring input
Relay 1
Relay 2
Relay 3
Dig. input 1
Dig. input 2
Dig. input 3
Dig. inputs 4+5
⊥
I1
⊥
I2
⊥
I3
⊥
I4
I5
Remote shutdown
*1
Parameter switching
I4: ext. signal
I5: local command

*₁ Parameter switching:

definitive mode (Operational mode 0):

I4 inactiv / contact open:	overfrequency 1, underfrequency 1
I4 activ / contact closed:	overfrequency 2, underfrequency 2

transitory mode (Operational mode 1):

I5 active / contact closed:	overfrequency 2, underfrequency 2
I5 inactive / contact open:	overfrequency 3, underfrequency 3

*₂ Auxiliary contact as normally opened, normally closed, or can be configured "not monitored”

2.8 Circuit diagram 4 (C10/11)

To be used for:

C10/11:2021 LV
C10/11:2021 HV

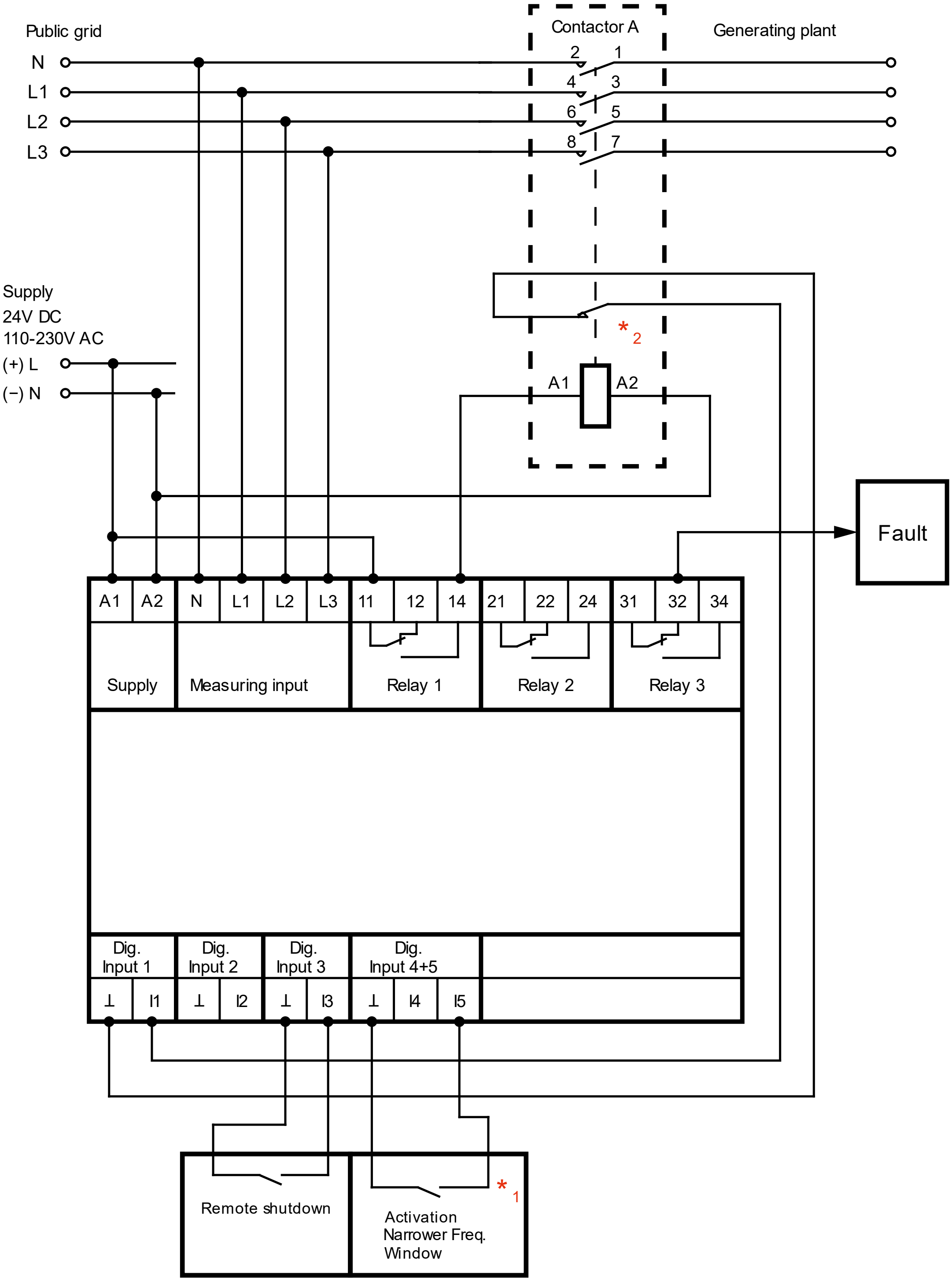
Public grid
N
L1
L2
L3
Contactor A
2
1
4
3
6
5
8
7
Generating plant
Supply
24V DC
110-230V AC
(+) L
(−) N
*2
A1
A2
Fault
A1
A2
N
L1
L2
L3
11
12
14
21
22
24
31
32
34
Supply
Measuring input
Relay 1
Relay 2
Relay 3
Dig. Input 1
Dig. Input 2
Dig. Input 3
Dig. Input 4+5
⊥
I1
⊥
I2
⊥
I3
⊥
I4
I5
Remote shutdown
Activation Narrower Freq. Window
*1

*₁ Parameter switching:

I5 inactive / contact opened:	overfrequency 1, underfrequency 1
I5 active / contact closed:	overfrequency 2, underfrequency 2 (narrower frequency window) (based on local voltage criteria / local setting)

*₂ Auxiliary contact configurable as normally opened, normally closed, or "not monitored"

3 Function

3.1 Features

- Simple implementation through pre-defined setups for country-specific standards and guidelines with parameters that can be set within a wide range.
- Wide nominal voltage and nominal frequency range, configurable nominal voltage
- Protection functions: U<<, U<, U>, U>>, U_{10min}, f<, f>, f<<, f>>
- Additional "Open setup" for free, practically unlimited parametrization in the field
- Single-fault tolerance
- Cyclical self-test
- Monitoring of the connected section switch
- Remote shutdown
- Loss of mains detection (RoCoF, PShift, phase voltage)
- Test function with the determination of the turn-off time of the connected isolated contactors
- Monitoring of 1- and 3- phase grids for low and medium voltage grids
- Error memory with a timestamp (50 entries)
- Password protection and ability to seal
- Random turn-off thresholds and turn-on times for non-controllable energy producers (e.g. CHP)
- Detection of the symmetrical component “Zero Sequence” in the 3-phase network (U_{zero})
- Switching to different frequency bands (narrower frequency window)
- FRT (fault ride through) capability
- Configuration service and single test protocols

3.2 Commissioning

After applying the supply voltage to A1 and A2, the start display appears for 5 seconds. The appliance is delivered without a set parameter set. During initial commissioning, the appliance enters parameter set selection (level 5 - menu item 5.001). Here, the corresponding country-specific parameter set/standard must be selected using +/- and confirmed with ENTER. For more information, see 4.2 “Menu navigation”.

3.3 Functional description

Depending on the country-specific configuration selected, the device can handle several monitoring functions (protection functions) at the same time.

Unless otherwise stated, the nominal voltage is 230V/400V and the nominal frequency is 50Hz (check menu item 1.010).

```
1.010    dflt     60
U1  230.0V f 50.00Hz
U2  230.0V
U3  230.0V
```

After exceeding or falling below a threshold value, R1 and R2 switch off after a response-delay that is defined especially for each threshold value. During the self-test and when the remote shutdown is activated, R1 and R2 switch off immediately. Only once all monitored parameters are within the permissible limits and the remote shutdown deactivated, R1 and R2 switch on again after a defined switch-on time.

When exceeds or falls below a limit value, R1 and R2 switch off after a response delay defined specifically for each limit value. During the self-test and when the remote shutdown is activated, R1 and R2 switch off immediately. Only when all monitored variables are within the permissible limits and the remote switch-off has been deactivated, R1 and R2 switch on again after a defined switch-on time.

R1 and R2, together with the connected isolating contactors (A and B), ensure the required mains separation (generating system – public mains) when a protective function is triggered.

The switching actions of the contactors are also monitored by the feedback contacts of the contactors, which are connected to the digital inputs of the XUFD, which further increases the system safety.

Make sure that the feedback contacts of the isolating contactors A/B are correctly connected. Menu item 1.040 provides information about the status of contactors A and B (DI1 and DI2). The feedback contacts may have to be re-parameterised under menu item 3.099 (n.c. versus n.o.). Another source of error are the masses of the digital inputs I1 and I2, which are not connected internally and must therefore always be connected externally.

Both relais R1 and R2 LEDs dark means that R1 and R2 are OFF (inoperative):

```
1.040    dflt     60
Toff ---ms
DI1 DI2 DI3 DI4 DI5
 1   1   0   0   0
```

The digital inputs DI1(2) signal a closed feedback contact of the isolating contactors with "1". If n.c. (normally closed) is selected for parameter 3.099, the wiring is correct.

If the digital inputs DI1(2) monitor "0", however, an open feedback contact of the contactors as in the following figure is recognized.

```
1.040    dflt     60
Toff ---ms
DI1 DI2 DI3 DI4 DI5
 0   0   0   0   0
```

And parameter 3.099 could be changed to n.o. (normally open), or the wiring between the isolating contactors A(B) and the digital inputs has not been done correctly.

Table of parameter 3.099:

Type of contactor of auxiliary contact			**Parameter 3.099 (setting value)**
Contact type	Contact designation	Symbol	
Normally open contact (n.o.)	13/14, 23/24, 33/34, …	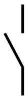	n.o.
Normally closed contact (n.c.)	11/12, 21/22, 31/32, …	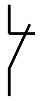	n.c.

3.4 Protection functions / comparators

Depending on the selected parameter set, certain protection functions / comparators are editable.

3.4.1 Voltage monitoring

Line to line 59.S1 59.S2	Overvoltage 1 Overvoltage 2	All 3 phase to phase voltages are monitored according to the set overvoltage thresholds. If the threshold is exceeded, R1 and R2 switch to OFF after the set response delay t_{off}. It can be deactivated in 2-phase (L+N) as well as 4-phase (L1, L2, L3+N) coupling mode!
Line to line 27.S1 27.S2	Undervoltage 1 Undervoltage 2	All 3 phase to phase voltages are monitored according to the undervoltage thresholds set. When falling below the threshold, R1 and R2 switch to OFF after the set response delay t_{off}. It can be deactivated in 2-phase (L+N) as well as 4-phase (L1, L2-L3+N) coupling mode!
Line to Neutral 59.S1 59.S2	Overvoltage 1 Overvoltage 2	All 3 phase-to-neutral voltages are monitored according to the overvoltage thresholds set! If the threshold is exceeded, R1 and R2 switch to OFF after the set response delay t_{off}. Exception: In 2-phase (L+N) coupling mode, only one overvoltage measurement takes place between L1 and N! It can be deactivated in 3-phase (L1, L2, L3) coupling mode!
Line to Neutral 27.S1 27.S2	Undervoltage 1 Undervoltage 2	All 3 phase-to-neutral voltages are monitored according to the undervoltage thresholds set! When falling below the threshold, R1 and R2 switch to OFF after the set response delay t_{off}. Exception: In 2-phase (L+N) coupling mode, only one overvoltage measurement takes place between L1 and N! It can be deactivated in 3-phase (L1, L2, L3) coupling mode!
Average 59-AV	Overvoltage	The 10-minutes average generated is monitored according to the thresholds set for the slow voltage increase protection. If the threshold is exceeded, R1 and R2 switch to OFF after the set response delay t_{off}. In 2-phase coupling mode: L-N In 3-phase coupling mode: L1-L2-L3 In 4-phase coupling mode: L1-N; L2-N; L3-N
U (Zero Sequence) Uzero Line to Neutral Line to line 59V0	Overvoltage	All 3 line-to-neutral voltages are added with magnitude and phase position, the resulting voltage is determined in terms of magnitude to the neutral conductor and subsequently divided by three. If the threshold is exceeded, R1 and R2 switch to OFF after the set response delay t_{off}. The zero sequence is only activated in the 4-phase (LN +LL) connection mode!
U (resulting) Ures Line to Neutral Line to line	Overvoltage	Activation of the narrower frequency window when the threshold of 3 x Zero Sequence is exceeded after the set response delay t_{off}.
U (**a**ctivation **n**arrower **f**requency **w**indow) U**anfw** Line to Neutral	Undervoltage	All 3 line-to-neutral voltages are monitored according to the set undervoltage thresholds. If the value falls below the threshold, the **n**arrower **f**requency **w**indow is activated after the set response delay t_{off}.

3.4.2 Frequency monitoring

Overfrequency 1 Overfrequency 2 Overfrequency 3 Overfrequency 4 81O.S1, 81O.S2, 81O.S3, 81O.S4	The frequency of the 3 phase-to-neutral voltages is monitored according to the overvoltage thresholds set. If the threshold is exceeded, R1 and R2 switch to OFF after the set response delay t_{off}. Exception: in 2-wire mode only U L1-N
Underfrequency 1 Underfrequency 2 Underfrequency 3 Underfrequency 4 81U.S1, 81U.S2, 81U.S3, 81U.S4	The frequencies of the 3 phase-to-neutral voltages are monitored according to the under-frequency thresholds set. When falling below the threshold, R1 and R2 switch to OFF after the set response delay t_{off}. Exception: in 2-wire mode only U L1-N
Random over frequency	The frequency of the 3 phase-to-neutral voltages is monitored according to the parameters set (random max. frequency). If the threshold is exceeded, R1 and R2 switch to OFF after the set response delay t_{off}. Exception: in 2-wire mode only U L1-N
Frequency monitoring undervoltage LL Frequency monitoring undervoltage LN	Depending on the mode (2-, 3-, 4-wire,) falling below the set threshold leads to the deactivation of the frequency comparators.
RoCoF 81R	The frequency change rates of the 3 phase-to-neutral voltages are monitored according to the parameters set. If the threshold is exceeded, R1 and R2 switch to OFF after the set response delay t_{off}. Exception: in 2-wire mode only U L1-N

3.4.3 Phase shift monitoring

Phase Shift 78	The phase shift behavior of the 3 phase-to-neutral voltages is monitored according to the parameters set. If the threshold is exceeded, R1 and R2 switch to OFF after the set response delay t_{off}. Exception: in 2-wire mode only U L1-N

3.5 Loss Of Mains (Microgrid) detection

A Microgrid is a locally defined electricity main that consists of only one or a few electric generators, supplying only a small area and is no longer connected to other electric grids.

3.5.1 Loss Of Mains (Microgrid) detection via voltage measurement

In this process, a microgrid is detected via 3-phase voltage monitoring (line-to-line conductor).

3.5.2 Loss Of Mains (Microgrid) detection via RoCoF

In this process, a microgrid is detected via rate-of-change of frequency. This measurement is based on frequency measurements and triggers in the event of lasting frequency changes over multiple periods. The limiting value df/dt is given and set in mHz/s.

3.5.3 Loss Of Mains (Microgrid) detection via vector shift

In this procedure, a phase or vector shift is detected via time measurements of the half-waves and the comparison with previous measurements. A vector jump can occur due to a sudden load change or shortcuts in the higher-level mains. The limit is indicated and set in degrees.

3.6 Test function

The test function can be activated in two different ways:

- Pressing the ESC key in any display of menu level 1
- Pressing the ENT key in screen 1.050

Both output-relays R1 and R2 are switched off at activation of the test function and the turn-on time begins to run.

As with every turn-off, the turn-off time in every test function is determined. The last turn-off time can be read in display 1.040 (Toff).

3.7 Digital inputs

The actual state of the digital inputs can be seen with menu item 1.040.

The different ⊥ for the digital inputs are not connected to each other internally, so they all must be connected individually when used.

Digital inputs 1 and 2 (each with ⊥) serve as feedback contacts of both isolating contactors A and B. They are driven via the auxiliary contact of the isolation contactor. Here, the auxiliary contact can be connected as normally opened or normally closed and the digital inputs configured accordingly in the device. The different ⊥ for the digital inputs are internally not connected to each other, so they must be connected individually when used.

The digital input 3 (I3 and ⊥) serves for remote shutdown. With configuration .114 (I3 STOP) n.o. (normally open) R1 and R2 are switched off by bridging I3 with ⊥. Using n.c. (normally closed), I3 must be bridged with ⊥ for normal operation (R1 and R2 switched on). By opening I3 from ⊥, R1 and R2 are switched off and thus also the connected contactors A and B. Disabling .114 (dis.) no remote shutdown can be performed.

Both digital inputs 4 and 5 are used for parameter switching for Italian standard CEI 0-21. Digital input 5 is used to activate the narrower frequency window for the Belgian and European parameter values C10/11:2021 and EN50549-1/2:2019.

3.8 Output relays R1, R2 and R3

The two output relays R1 and R2 trigger the isolating contactors/coupling switches. If the public mains is measured and found to be OK by the XUFD, the generating unit may supply in. R1 and R2 switch state to ON (LED R1 and LED R2 light up). The connected isolating contactors at 11-14 (21-24) are actuated and connect the generating unit to the power grid.
If measured line-to-null/line-to-line voltages, mains frequency (or RoCoF, Pshift, Uzero) move outside their assigned limits, a protection function is activated. In this case R1 and R2 switch to OFF, which opens the isolating contactors 11-14 (21-24), thus disconnecting the generating unit from the public mains.

The output relay R3 is handled country-specific. This allows error states (violations of the protective function, incorrectly configured/wired feedback contacts) to be evaluated. Depending on the error case for which R3 is configured, it switches state to ON in the event of an error (LED R3 lights up). An error occurs if, for example there is a voltage error or the feedback contacts are not connected/incorrectly connected).

3.9 Error

Latest errors are displayed in level "1.060 Error," the display of the error memory is located in level 2. There is a difference between Measurement errors and system errors as follows:

3.9.1 Measurement error

```
1.060   Error
M: UΔ UY Ū f Δf ΔΦ C
S: T0123456789ABCDEF
              ENT ->
```

Only the current present error is shown here!

Error types:

UΔ	Phase to phase voltage error (under or overvoltage)
UY	Phase-to-neutral voltage error (under or overvoltage, Zero Sequence)
Ū	10-minute average voltage error
f	Frequency error (under or over frequency)
Δf	Frequency ramp error (RoCoF)
ΔΦ	Phase shift error (PShift)
C	Feedback contact error – Contactor falsely closed
c	Feedback contact error – Contactor falsely opened

3.9.2 System error

```
1.060   Error
M: UΔ UY Ū f Δf ΔΦ C
S: T0123456789ABCDEF
              ENT ->
```

Error types:

T	Remote shutdown active
0-9, A-F	If this error appears permanently, please contact our technical support.

System error entries are found in the error memory when the unit is delivered. These are caused by the factory due to final tests of the device, in which these errors are induced on purpose. As the error memory cannot be deleted, these entries do not represent a device error and can simply be ignored.

3.9.3 Error memory (LOG)

The error memory (for max. 50 LOGs) is displayed in level 2.
In the error memory, both the occurrence and the disappearance of each error are stored with a time stamp. Entry without an error code is therefore not a malfunction.

```
2.0nn   Error
M: UΔ UY Ū f Δf ΔΦ C
S: T0123456789ABCDEF
t: 9999d 15h 03m 01s
```

nn …	The number of the entry in the error memory
t …	Timestamp: duration since occurrence in days/hours/minutes/seconds

3.10 Changes of country-specific parameter sets

3.10.1 VDE-AR-N 4105:2018

For the 3 new parameter sets of VDE-AR-N 4105 (3.3.3-5), the following applies for the commissioning:

When commissioning, make sure that only one coupling switch (on R1) is used. VDE-AR-N 4105 for inverters is an exception – here, 2 coupling switches (on R1 and R2) must still be used. Furthermore, the feedback contact(s) must be connected to the digital inputs I1(2) – ⊥ provided for this purpose. Finally, parameter 3.099 determines whether the feedback contact(s) are normally closed (n.c.) or normally open (n.o.).
An Error C (Contact) appears on the display if this has not been taken into account. The XUFD must not switch on the output relays R1(2) for VDE-AR-N 4105 during an Error C as long as the feedback contacts are not correctly connected and parameterized.

Contact Error-Reset:

If U_N 3×400V AC is properly applied, a reset can only be carried out by pressing Esc (level 1.010) or Ent (level 1.050). The contact error is then cleared and the output relays (R1 and R2) energize after the switch-on time has elapsed.
An existing contact error can also be reported to the generating system via R3.
In this context, we would like to refer to Chapter 3.6 “Test function” (determining the tripping time of the coupling switch).

New parameter T_ConDelOn:

By means of synchronizing devices or circuit breakers, it is permitted that after the release by the XUFD protective relay, the coupling contactor(s) are only switched on with a delay. Therefore, the feedback from the feedback contact is also delayed. The permissible response-delay is set with **parameter 3.110 T_ConDelOn**. In the default setting, this time is parameterized with **100 ms** and can be set up to a maximum of 300 000 ms (5 minutes). The conformity is guaranteed up to 10 000 ms.

Criteria for the coupling switch:

With the set tripping time of 100 ms for the various protection functions, the maximum tripping time of the XUFD is 119ms with the **German parameter sets**. To ensure the total tripping time of ≤200 ms (XUFD + coupling switch), the **coupling switch** used must be able to **trip** within **81ms.**

Password protection:

The factory default is with respect to VDE-AR-N 4105 that the XUFD has password protection enabled. The password is **4105**. For safety reasons , the commissioning engineer is requested to change the password immediately to an individual one (see 4.2.5 “Level 4”).

3.10.2 C10/11:2021

Zero Sequence protection function:
The detection of the zero sequence (Uzero) in the three-phase system forms a further addition to the protection functions. Zero sequence can be used, for example, to detect short circuits in the higher-level medium power grid. The three line-to-neutral voltages L1, L2 and L3 (which are normally shifted by 120° one against the other) are added as vectors (i. e. taking into account both the magnitude and the phase position). Then the magnitude of the voltage difference (without angle) to the neutral conductor is determined and divided by three.
If all line-to-neutral voltages have the same magnitude and are shifted exactly by 120° to each other, the zero sequence is 0 VAC.
In the currently valid version of the C10/11, the limit value for zero sequence is 20% Un (46 VAC). If this limit is exceeded for >1.5 seconds, R1 and R2 switch off and do not switch on again after the T_{on} delay has elapsed, until the zero sequence falls below 15% Un (34.5 VAC). The corresponding parameters can be found in parameter set ID:603 from 3.115 to 3.118 – see APPENDIX (Parameters of the implemented standards in detail).

Connection Mode 4-wire (LN+LL) is required to determine the zero sequence. This is activated by default in parameter set ID 603 for C10-11:2021 LV-IP and must not be changed by the local mains operator if the Zero Sequence protection function is mandatory. In parameter set ID 653 for C10-11:2021 HV-IP, the determination of the zero sequence must be individually discussed with the local mains operator and set accordingly.

For error-free detection of the zero sequence, none of the 3 angles (Phi1, Phi2 or Phi3) between L1, L2 and L3 must exceed 180°. Furthermore, the direction of rotation of the 3 phases L1->L2->L3 must be strictly ensured. For this purpose, L1, L2 and L3 of the power grid must be connect parallel to the phases L1, L2 and L3 of the XUFD in this order. To detect the zero sequence, the neutral conductor must be connected (also due to Connection Mode 4-wire (LN+LL)).

Activation of narrower frequency window:
This is based on 2 criteria of locally prevailing voltages in Microgrids. In the event of a response, a narrower frequency window <49.7Hz and >50.3Hz (500ms) is monitored in addition to the normal frequency monitoring ≤47.5Hz and ≥51.5Hz (<100ms), thus forming a further protection function for shut down R1 and R2 for mains disconnection.

1. Criterion: Activation of the narrower frequency window on exceeding Ures-anfw > 5% Un (Ures-anfw = 3 · Uzero). Related parameters for deactivation, for example, starting from 3.119 to 3.122.
   With this criterion, it should be noted that even the smallest changes in one of the line-to-neutral voltages <218.5VAC (for Un = 230VAC) or an angular change in one of the line-to-neutral voltages of >2.87° result in the activation of the narrower frequency window.

2. Criterion: Activation of the narrower frequency window when one of the line-to-neutral voltages is below 85%. This criterion replaces the measurement of the rotating and counterrotating symmetrical components of the 3-phase system.
   Related parameters for deactivation, for example Starting with 3.123 to 3.126.

Another possibility to activate the narrower frequency window is to bridge the digital input I5 with ⊥ in order to be able to connect further measurement options here, as recommended in EN50549-1:2019 + AC:2019 (see Circuit diagram 4 (C10/11)).

Important: The settings for activating the narrower frequency window (3.062 to 3.069 and 3.119 to 3.126) must be discussed and documented with the local network operator.

3.10.3 EN50549-1/2:2019 (default Netherlands)

For the European EN50549-1/2, the same prerequisites apply regarding the activation of the narrower frequency window as in chapter 3.10.2. The corresponding parameters (3.062 to 3.069 and 3.119 to 3.126) are, however, deactivated and must be parameterized after consultation with the local network operator. Furthermore, the protection function Zero Sequence can also be activated in the parameter sets of EN50549-1/2 as mentioned in 3.10.2.
The default settings in the parameter set are designed for the standard protection functions of the Netherlands.

3.10.4 Open Setup

Within the parameter set 9006_OPEN_SETUP, voltage threshold values for the deactivation of all 3 available frequency stages can now be activated. Activation/deactivation is done with parameter 3.046 for LL measurements and parameter 3.050 for LN measurements. With 3.047 (for LL) or with 3.051 (for LN), the voltage thresholds for deactivating the frequency stages can be set. In most countries, these are around 20% Un. The hysteresis for the repeated connection is automatically defined as 1%.
With OPEN_SETUP, the Zero Sequence can also be activated as the activation of narrower frequency band.

4 Operation and commissioning

4.1 Initial commissioning

The device is delivered without a pre-configured standard. During initial commissioning, the device will prompt to select a parameter set (level 5 - menu point 5.001). Here, the corresponding configuration/standard must be selected via +/– and confirmed with ENTER.

You can find more information in the menu structure.

4.2 Menu navigation

The display unit consists of a 4-line text display with 20 characters per line.
The display has 5 levels. The different displays of the levels can be navigated via + and –.

4.2.1 Level 0

Start screen (display for 5 seconds at power-up)
Basic information is displayed here. This display appears after power-up and remains visible for 5 s. Then the display jumps to the first window in level 1.

4.2.2 Level 1

Measurements (screen 1.010-1.032)
Display of the current measurements.

Additionally, it will also be displayed here if the parameter set corresponds to the default configuration (dflt – default = base or factory setting), was edited within the normative permissible limit values (edit – edited), or is set outside the normative permissible limit values (ncnf – non conform = does not comply with the selected regulation or the selected standard).

If required, display of time-lapse “reconnection timer” (turn-on time) in seconds.

Navigation +/–. From this screen, you can access level 3 via ENT

Digital inputs and turn-off time (screen 1.040)
Displays the actual states of the digital inputs and the last turn-off time (Toff) of the connected contactors (the larger value for two-channel systems).

Additionally, it will also be displayed here if the parameter set corresponds to the default configuration (dflt - default = base or factory setting), was edited within the normative permissible limit values (edit – edited), or is set outside the normative permissible limit values (ncnf – non conform = does not comply with the selected regulation or the selected standard).

If required, display of time-lapse “reconnection timer” (turn-on time) in seconds.
Status display of the 5 digital inputs.

Navigation +/–. From this screen, you can access level 3 via ENT.

Test/Reset (1.050)
A relay test is triggered by pressing the ENT key. In this test, relays A and B turn off and the "reconnection-timer" (turn-on time) begins to run.
Also, a reset event can be carried out with the test/rest function, which allows relay 1/2 to be switched on again after a contact error (C) (required for the three-parameter sets VDE-AR-N 4105).
The test/reset event can also be performed by pressing the ESC key in level 1.

Error (1.060)
Display of current error:

M	Measurement error
S	System error

Navigation +/–. You can access level 2 by pressing the ENT key.

4.2.3 Level 2

Error memory
This is where the latest errors are displayed with a timestamp (time since occurrence). The time is only counted when the device is powered. Both positive, as well as negative error flanks, are saved and displayed.

Navigation +/–. From this screen, you can access level 1 via ESC.

4.2.4 Level 3

Parameter display
Here, the parameters that have been visibly switched for the corresponding configuration are displayed.
Navigation +/–. From this screen, you can access level 1 via ESC.
You can access the editing mode of the selected parameter via PROG (can be lead-sealed).

The password query is skipped if the password is `0000` so that you enter the editing mode in level 5 directly.
If a valid password has been entered in the last 60 seconds, the password query is also skipped and you enter level 5 directly.
If a password other than `0000` has been defined, you are asked for the password in level 4.

4.2.5 Level 4

Password input
The currently active digit of the password can be incremented/decremented (0…9) via +/–.
ENT jumps to the next digit of the password entry.
The entered password is checked after pressing ENT in the 4th position.
ESC jumps back to the previous digit of the password entry.
The program goes back to Level 3 when you press ESC at the first digit of the password.

If you have forgotten the password, please contact our technical support and let them know the device ID. You will receive a master password only relevant to your device.

4.2.6 Level 5

Parameter editing
In this level, the parameter previously selected in level 3 can be changed with +/–.
Confirm with ENT or use ESC to discard the change. In both cases, the display jumps to the corresponding parameter in level 3.

Additionally, the display also shows whether the value that was just edited corresponds to the default configuration (dflt - default = base or factory setting), or whether it was edited within the normative permissible limit values (edit – edited), or is set outside the normative permissible limit values (ncnf – non conform = does not comply with the selected regulation or the selected standard).

Alongside thresholds, times, and modes, the 4 digits of the password also have 1 parameter each.

The current standard is a parameter too. This means that a newly selected standard will be activated by changing this parameter. Therefore, all previous changes will be discarded.

If the already set standard is (re-)selected, all parameters are reset to the respective default values belonging to this standard.

4.3 Operating menu structure

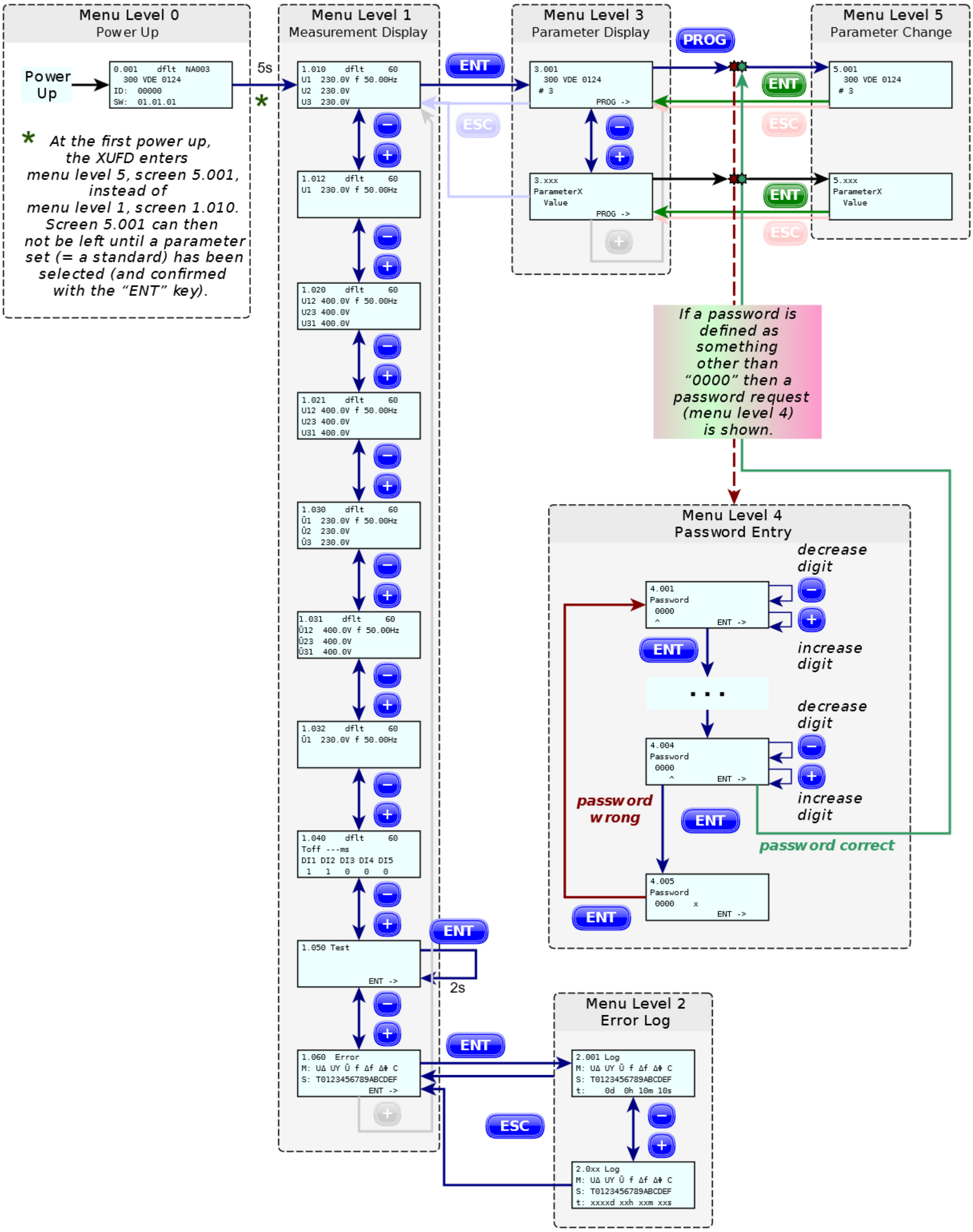
Menu Level 0
Power Up
Power Up
0.001 dflt NA003
300 VDE 0124
ID: 00000
SW: 01.01.01
5s
*
Menu Level 1
Measurement Display
1.010 dflt 60
U1 230.0V f 50.00Hz
U2 230.0V
U3 230.0V
1.012 dflt 60
U1 230.0V f 50.00Hz
1.020 dflt 60
U12 400.0V f 50.00Hz
U23 400.0V
U31 400.0V
1.021 dflt 60
U12 400.0V f 50.00Hz
U23 400.0V
U31 400.0V
1.030 dflt 60
Ū1 230.0V f 50.00Hz
Ū2 230.0V
Ū3 230.0V
1.031 dflt 60
Ū12 400.0V f 50.00Hz
Ū23 400.0V
Ū31 400.0V
1.032 dflt 60
Ū1 230.0V f 50.00Hz
1.040 dflt 60
Toff ---ms
DI1 DI2 DI3 DI4 DI5
1 1 0 0 0
1.050 Test
ENT ->
2s
1.060 Error
M: UΔ UY Ū f Δf ΔΦ C
S: T0123456789ABCDEF
ENT ->
ENT
ESC
−
+
Menu Level 3
Parameter Display
3.001
300 VDE 0124
# 3
PROG ->
3.xxx
ParameterX
Value
PROG ->
PROG
Menu Level 5
Parameter Change
5.001
300 VDE 0124
# 3
5.xxx
ParameterX
Value
ENT
ESC
Menu Level 4
Password Entry
4.001
Password
0000
^
ENT ->
decrease digit
increase digit
. . .
4.004
Password
0000
^
ENT ->
password wrong
password correct
4.005
Password
0000 x
ENT ->
Menu Level 2
Error Log
2.001 Log
M: UΔ UY Ū f Δf ΔΦ C
S: T0123456789ABCDEF
t: 0d 0h 10m 10s
2.0xx Log
M: UΔ UY Ū f Δf ΔΦ C
S: T0123456789ABCDEF
t: xxxxd xxh xxm xxs

* At the first power up, the XUFD enters menu level 5, screen 5.001, instead of menu level 1, screen 1.010. Screen 5.001 can then not be left until a parameter set (= a standard) has been selected (and confirmed with the “ENT” key).

If a password is defined as something other than “0000” then a password request (menu level 4) is shown.

Remark about menu levels 1, 3, 5:

- `dflt` = default
- `edit` = edited
- `ncnf` = non-conform

Within menu level 1, these designations refer to all the settings within the set standard. Within menu levels 3 and 5, they refer to only the displayed parameter.

Remark about the measurement display, menu level 1: The set of screens and displayed values depend on the selected parameter set / standard and on the configuration, in particular on `3.003 Connection`:

Setting `3.003 Connection`	**Displayed Screens in Menu Level 1**
2-wire	1.012, 1.032
3-wire	1.021, 1.031
4-wire (LN)	1.010, 1.030
4-wire (LN+LL)	1.010, 1.020, 1.030

Remarks about the password: When a new parameter set / standard is activated, the password is always re-set to “`0000`” (exception: VDE-AR-N 4105, standard password “`4105`”, see 0).
If the password is “`0000`” the password prompt is skipped.
After the password has been correctly entered there is no more password query until the menu levels 3 or 5 are left.
If no pushbutton is pressed the XUFD automatically enters menu level 1 (measurement display), while any unconfirmed changes get cancelled.
If the password should be forgotten it is possible to ask the manufacturer for a master password. The ID, that is displayed at screen 0.001, is required for this.

Remark about the error log, screen 1.060 and menu level 2:

`M`: Measuring errors

- `UΔ` = Line-to-line voltage
- `UY` = Line-to-neutral voltage
- `Ū` = Average voltage
- `F` = Frequency
- `Δf` = RoCoF
- `ΔΦ` = Phase shift
- `C` = Auxiliary contact

`S`: System errors

- `T` = Remote disconnection
- `0` = CODEID
- `1` = CCODEVERS
- `2` = CODECRC
- `3` = FLASHCRC
- `4` = EEPROMCRC
- `5` = LOGICVERS
- `6` = LOGICCRC
- `7` = *reserved*
- `8` = POWER6V
- `9` = POWERDIGINP
- `A` = MEASCOMPAB
- `B` = PWDINACTIVE
- `C` = INTERCOM1
- `D` = *reserved*
- `E` = *reserved*
- `F` = *reserved*

4.4 Lead seal

After commissioning, the device is to be secured against unauthorized changes of the protection-relevant setting parameters via a configurable password! If password protection is not used or if the country-specific regulations or standards demand it, the device is to be lead-sealed!

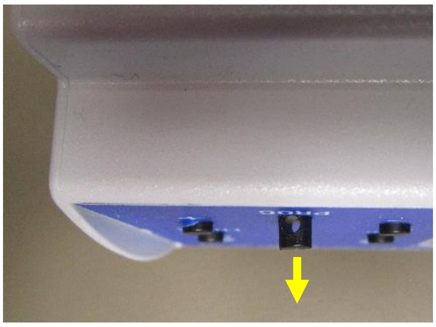

[1.] The “PROG” key can be pulled outwards (without applying force!).

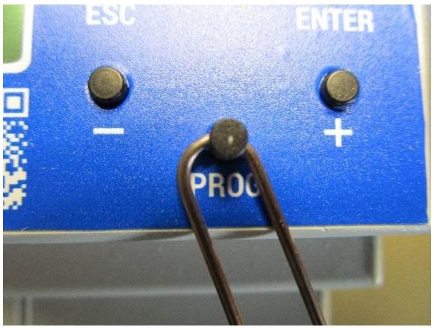

[2.] The sealing wire can be threaded through the hole within this key (max. diameter: see 4.15).

4.5 Use cases

4.5.1 Use of voltage transformers in medium voltage networks (OVE TOR R25, OOE TOR R25)

Using Austria as an example, in medium voltage network a distinction is made between two basic voltage levels:
21 kV and [31.7 kV for special cases e.g. wind farms] phase to phase voltage.

Use of a 200:1 voltage converter at Uc = 21kV:

1. Select the parameter set **852** (OVE/OOE TOR R25 MS SYNC) for synchronous or **853** (OVE/OOE TOR R25 NS ASYNC) for non-synchronous generating systems (converter).

2. Parameter .005 (setting the nominal voltage ULN/LL nom) to **60.4/105.0V**. Mathematically, the value results from 21kV/200 = 105V (the 60.4V stand for the phase to neutral voltages, which are not relevant for medium-voltage applications). The setting options are possible as described with **60.4/105.0V**.

Use of a 200:1 voltage converter at Uc = 31,7kV (e.g. wind farms):

1. Select the parameter set **852** (OVE/OOE TOR R25 MS SYNC) for synchronous or **853** (OVE/OOE TOR R25 NS ASYNC) for non-synchronous generating systems (converter).

2. Parameter .005 (setting the nominal voltage ULN/LL nom) to **91.0/158.1V**. Mathematically, the value results from 31.7kV / 200 = 158.5V (the 91.0V stand for the phase to neutral voltages, which are not relevant for medium-voltage applications). The setting options are possible as described with **91.0/158.1V**.

Use of a 300:1 voltage converter at Uc = 31,7kV (e.g. wind farms):

1. Select the parameter set **852** (OVE/OOE TOR R25 MS SYNC) for synchronous or **853** (OVE/OOE TOR R25 NS ASYNC) for non-synchronous generating systems (converter).

2. Parameter .005 (setting the nominal voltage ULN/LL nom) to **60.4/105.0V**. Mathematically, the value results from 31.7kV/300 = 105.6V (the 60.4V stand for the phase to neutral voltages, which are not relevant for medium-voltage applications). The setting options are possible as described with **60.4/105.0V**.

In any case, the following applies: All protective functions U>>, U>, U<<, U< automatically adjust to the newly set voltage levels, this means changes only need to be made if they do not meet the requirements of the network operator.

Changing the protective function U> and U>> according to the specifications of the network operator:

In the delivery state (default), these thresholds for U>off are 1.06×Uc (106%) and for U>>off 1.1×Uc (110%). If the network operator requests settings for U> off for example 1.04×Uc (104%) and U>>off for example 1.15×Uc (115%), both parameters .011 and .027 must be adjusted. If there are also different specifications for the undervoltage thresholds, parameters .015 (U<off) and .031 (U<< off) must also be adjusted.

Note: In low-voltage networks, the nominal voltage is designated Un and in medium voltage networks Uc.

4.5.2 FRT (Fault Ride Through) capability of generators:

The FRT capability must be considered separately for the different components of power generation equipment. The FRT capability of isolating contactors is described in chapter 2.6. The installer of the power generation system must ensure that sufficient buffering is available for the isolating contactors.
The installer of the power generation plant must also ensure that the requirements from the FRT (different requirements between countries) and the protection settings for undervoltage (U</U<< and Time OFF) do not affect each other.
If the XUFD (A1/A2) is supplied by the measuring circuit (not supplied separately from the measuring circuit), it can be guaranteed that the following FRT requirements from TOR 1.1 and VDE-AR-N 4105: 2018 can be run through without any problems (even at short intervals) while the output relays R1/R2 do not switch off erroneously due to the internal power supply unit.

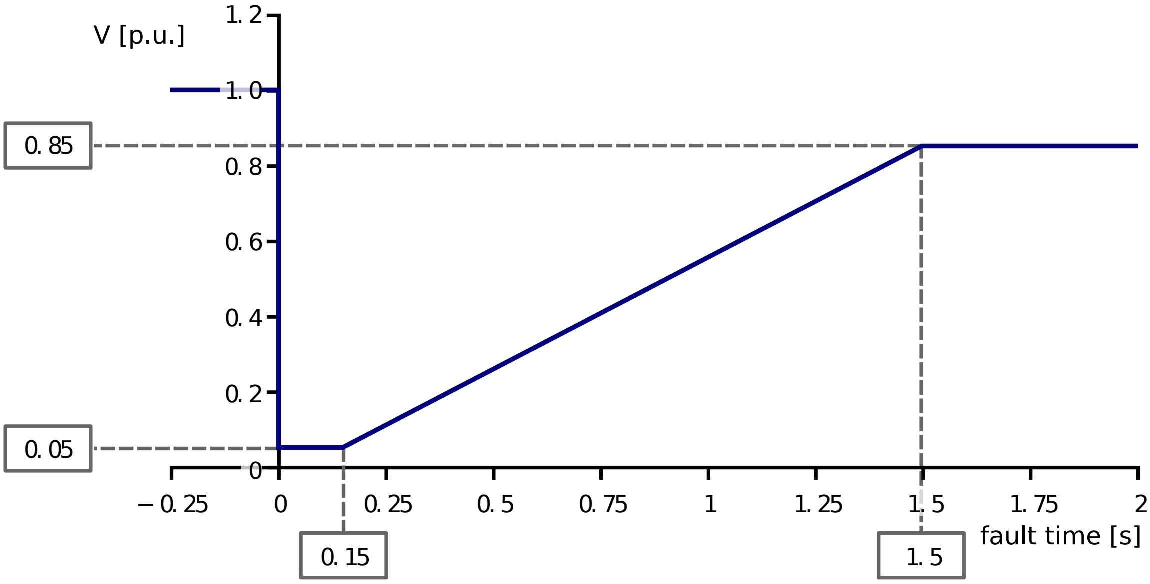

(FRT-profile of asynchronous generators at middle voltage according to TOR 1.1 2019; the most difficult FRT behavior was chosen)

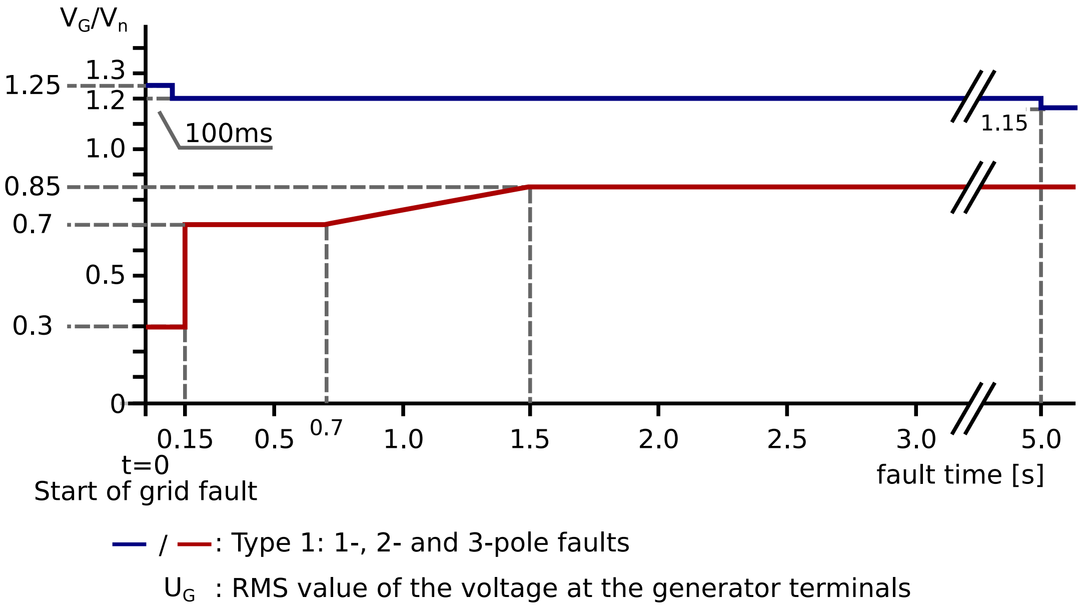

(FRT profile according to VDE-AR-N 4105:2018 Type1- synchronous generators only)

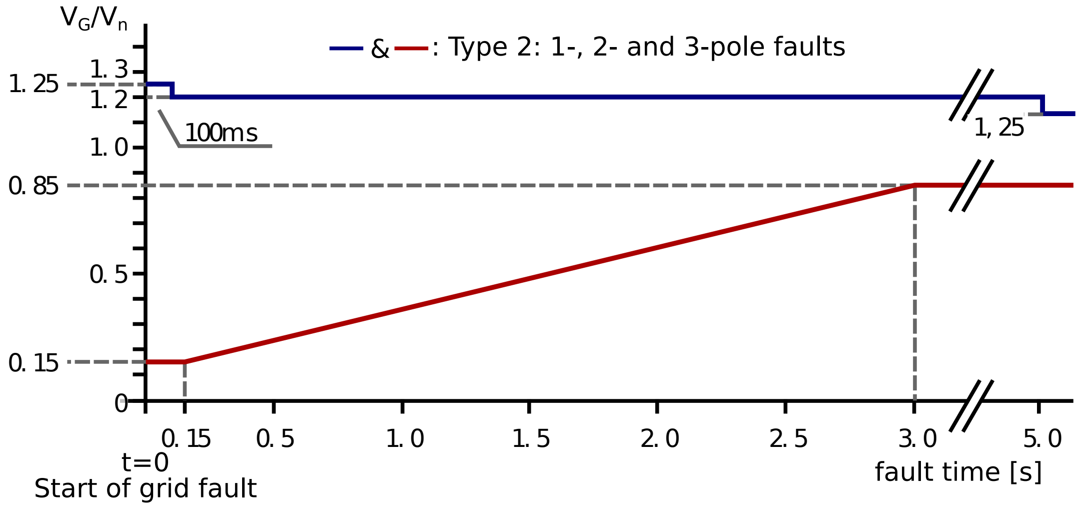

(FRT profile according to VDE-AR-N 4105:2018 Type2- converter and others)

This FRT behavior applies to the entire AC supply range 110–230 VAC. For a supply with 24 VDC, the FRT behavior (no dropout of the output relays R1/R2) is not guaranteed.
In this case, the power plant installer must ensure that the 24 VDC is adequately buffered (device consumption 1.25 W / 4 VA).

In case of a total power loss, for example L1 goes offline and A1 and A2 are connected to L1 and N, the internal PSU bridges the gap. The XUFD protection relay does not reset and the relays R1 and R2 do not switch off.

Buffer times are defined as follows:
230 VAC <580 ms
110 VAC <200 ms
24 VDC < 70 ms (The protection is supplied externally.)

There is neither a reset of the protection nor do the relays R1/2 drop out. But already mentioned override only affects the XUFD. If XUFD A1/A2 is connected to the isolating contactors on A1/A2, a separate calculation of the internal consumption of the isolating contactors must always be done.

4.5.3 Self-retention for remote shutdown with manual reset

For special applications, the network operator may require a manual reset after a remote shutdown. This is currently possible through the implementation of a self-retaining circuit:

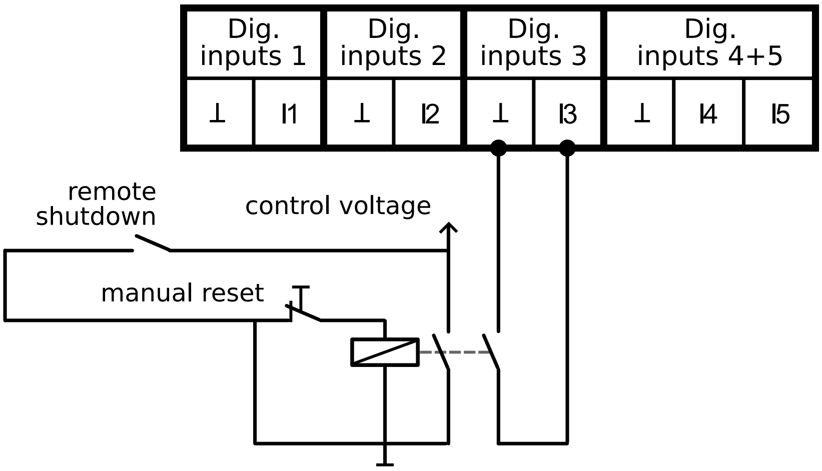
Dig. inputs 1
⊥
I1
Dig. inputs 2
⊥
I2
Dig. inputs 3
⊥
I3
Dig. inputs 4+5
⊥
I4
I5
remote shutdown
control voltage
manual reset

4.5.4 Connection of a load management device for power reduction 0%

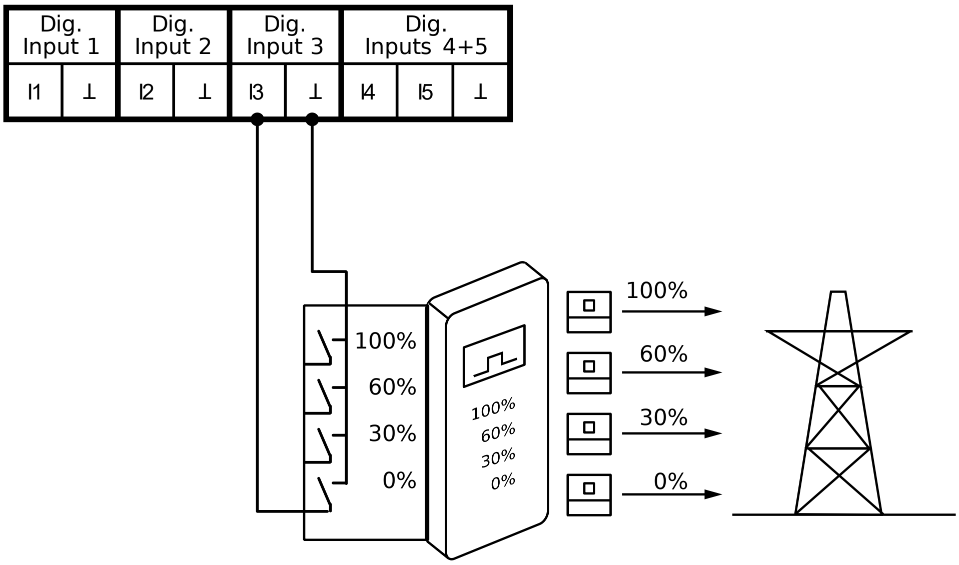
Dig. Input 1
I1
⊥
Dig. Input 2
I2
⊥
Dig. Input 3
I3
⊥
Dig. Inputs 4+5
I4
I5
⊥
100%
60%
30%
0%
100%
60%
30%
0%
100%
60%
30%
0%

4.6 Supply circuit

Terminals	A1 (L or +); A2 (N or –)
Supply voltage	DC: 24V AC: 110 – 230V
Tolerance of the supply voltage	DC: ± 10% AC: ± 30%
Nominal consumption	max. 1.25W / 4VA @ 230V AC
Nominal frequency	50 / 60Hz
Tolerance of the nominal frequency	48 – 63Hz
Duration of operation	100%
Recovery time	6 seconds + set turn-on delay
Drop-out voltage	7V
Overvoltage category	III
Rated surge voltage	6 kV
Internal fusing	250V / 500mA slow blow (soldered)

To ensure the device's functionality during a power failure, the device is to be supplied via an external UPS system!

4.7 Measuring circuit

Terminals	L1-L2-L3-N
Measuring input	3x 400 VAC
Input impedance	1 MΩ
Measured quantities	Phase to phase voltage, phase-to-neutral voltage, 10 minutes voltage average, frequency, frequency change (RoCoF), Phase shift (PShift), Zero Sequence

4.8 Measuring ranges

Phase voltage	0 – 560VAC
Phase-to-neutral voltage	0 – 325VAC
Frequency	40 – 65Hz (measured between L1/N)
RoCoF	100mHz/s – 2.000mHz/s
PShift	1 – 15°
Overload capacity	Permanent 1.4 × U_{Nom} Impulse 1.6 × U_{Nom} (1 second)
Overvoltage category	III
Rated surge voltage	4 kV

4.9 Digital inputs

Terminals	I1 and ⊥ ; I2 and ⊥ ; I3 and ⊥ ; I4 resp. I5 and ⊥ I1, I2, I3 can be configured as n.c., n.o. and dis.
Contact type	potential-free (max. cable length 30m, laying as a control line, separate from power cables)
Switching capacity	24V DC / 5mA

4.10 Output circuit

Terminals	11-12-14; 21-22-24; 31-32-34
Number and type of contacts	3 changeover contacts
Contact material	AgNi
Switching capacity	5A / 250V AC
Electrical switching frequency (AC1-)	100 x 10^3 switching cycles
Mechanical switching frequency	15 x 10^6 switching cycles
Continuous current value	5A
Short time value (1s)	5A
Withstanding voltage across open contacts	Relay contacts: 1000V_{rms} Terminals: 450V_{rms}
Overvoltage category	III
Rated surge voltage	4 kV
Fusing	5A fast acting

4.11 Accuracy

Voltage measurement:	
Base accuracy	< 0,5% @ +25°C
Temperature effect	< 0,01%/°C
Resolution	10mV
Frequency measurement:	
Base accuracy	< 0,01Hz @ +25°C
Temperature effect	< 0,0002Hz/°C
Resolution	1mHz
Start-up T_{on} delay	0…600s ± 0,6%
response-delay (TIME OFF), $t_{UTHR\ OFF}$	0…300s ± 0,6%
Reset (Release) delay, $t_{UTHR\ ON\_total}$	130ms ± 45%
Operating time at overvoltage t_{over}	95ms ± 50%
Operating time at undervoltage t_{under}	95ms ± 40%
Response time, $t_{off\_total\_over/under}$	$t_{off\_total\_over} = t_{over} + t_{UTHR\ OFF}$ $t_{off\_total\_under} = t_{under} + t_{UTHR\ OFF}$
Overshoot time	40ms

4.12 Insulation data

Rated insulation voltage	400V
Insulation	
Supply circuit/measuring circuit	Safe isolation
Supply circuit/output circuit	Safe isolation
Supply circuit / digital inputs	Safe isolation
Output circuit/measuring circuit	Base isolation
Output circuit / digital inputs	Base isolation

4.13 Environmental conditions

Ambient temperature operation	−25 up to +65°C
Ambient temperature storage	−40 up to +70°C
Display capability	−15 up to +65°C
Relative air humidity	5 up to 95%
Degree of contamination	2
Weight	300g
MTTF	93000h (for display temperature 25°C ± 5°C)
Installation altitude:	Up to 2000 m above sea level
Installation:	An external circuit-breaker is required for mains installation to the unit. Installation class 1 must be available in the environment
Location:	For indoor use only
Ventilation:	No ventilation of surrounding air required
Cleaning:	If necessary, the surface of the housing may be cleaned with a dry cloth, only when all sources of power are switch off
Installation note:	Power contactors may cause significant disturbances. Therefore, the XUFD should be mounted with a minimum distance of 5 cm to neighbouring power contactors.

4.14 Electrical connection

Connection cross-section	max. 2.5mm^2
Stripping length	max. 8mm
Electrical capacity of the clamps:	
Relay outputs / digital inputs	max. 450V/16A
Measuring inputs	max. 750V/16A
Tightening torque	max. 0.5Nm
Screw	M3, screwdriver for slotted screws 0.6 × 3.5mm
Digital input circuits and output relays	No limitation for simultaneous operation of inputs and/or outputs within the specified limits

4.15 Sealing wire

Wire diameter	Ø max. 1.32mm

4.16 Protection class

Terminals	IP 20
Housing	IP 20

5 Settings of the implemented configurations

Definition for the following tables:
Lines highlighted in gray mean that the associated parameters can be edited.
All other settings are fixed.

5.1.1 Connection Modes

2-wire	Only the voltage between L1 and N is evaluated
3-wire	Only the line to line voltages U_{L1-L2}, U_{L2-L3} and U_{L3-L1} are evaluated
4-wire (LN)	Only the phase-to-neutral voltages U_{L1-N}, U_{L2-N}, and U_{L3-N} are evaluated
4-wire (LN+LL)	Both the phase-to-neutral voltages U_{L1-N}, U_{L2-N}, and U_{L3-N} as well as the phase to phase voltages U_{L1-L2}, U_{L2-L3}, and U_{L3-L1} are evaluated

5.1.2 Units

%Unom	Percent of the nominal voltage (nominal voltage factor)

5.1.3 Functional safety

Errtol 2ch	2 separated contactors with 2 separated auxiliary contacts are connected
Errtol 1ch	1 external contactor with 1 auxiliary contact is connected

5.1.4 Operational mode

It is possible to switch between 2 different operating modes
It is currently only used for the CEI-021 … see CEI-021 8.6.2.1.1
Mode 0: transitory mode
Mode 1: definitive mode

5.1.5 Thresholds

U_{THR} OFF	Voltage threshold for the turn-off
U_{THR} ON	Voltage threshold for turn-on
f_{THR} OFF	Frequency threshold for the turn-off
f_{THR} ON	Frequency threshold for turn-on
$RoCoF_{THR}$ OFF	Frequency change threshold for the turn-off
$RoCoF_{THR}$ ON	Frequency change threshold for turn-on
$PShift_{THR}$ OFF	Phase shift threshold for the turn-off
$PShift_{THR}$ ON	Phase shift threshold for turn-on

5.1.6 Times

Time OFF	response-delay
T on delay	Turn-on delay
F wnd	window length frequency measuring (observed time window used for determining frequency f / Hz, adjustable from 0.1s to 1s depending on the used parameter set).
RoCoF wnd	window length RoCoF (Rate of Change of Frequency) measuring (observed time window that is used to determine the RoCoF Hz / s, adjustable from 0.1s to 1s depending on the parameter set used)
PShift wnd	window length PShift (phase shift) measuring (observed time window that is used to determine the PShift / °, adjustable from 0.1s to 1s depending on the parameter set used, whereby only a setting of 0.1 to 0.6s makes sense. Pshift wnd from 0.6s to 1s does not affect the total tripping time.)
Total tripping time	This is made up of the following when measuring frequency, RoCoF or Pshift: • Frequency measurement: $\text{TIME OFF total}_{f} = \text{Time OFF}_{f} + \text{F wnd}$ • RoCoF measurement: $\text{TIME OFF total}_{RoCoF} = \text{Time OFF}_{RoCoF} + \text{RoCoF wnd}$ • Phase shift measurement: $\text{TIME OFF total}_{PShift} = \text{Time OFF}_{PShift} + \text{PShift wnd}$

5.1.7 Auxiliary contact

Read back of the position of the actuated contactors (via positively driven auxiliary contacts) is required for the necessary functional safety. The following can be selected for these auxiliary contacts:

Contact n.c.	Auxiliary contact is normally closed (recommended implementation)
Contact n.o.	Auxiliary contact is normally opened
Contact dis. (disabled)	Auxiliary contact is ignored (impermissible for standards that require functional safety)
Contact t	Setting the time-delay (for switching off) that could elapse before the auxiliary contact of the coupling relay must feedback to I1/2, otherwise display a contact error.
T ConDelOn	Setting the time-delay (for switching on) that could elapse before the auxiliary contact of the coupling relay must feedback to I1/2, otherwise display a contact error and switch off R1/2. R3 is also activated.

5.1.8 Ranges

Conformity range	Within this range, the device is configured in compliance with the selected standards. Outside of these ranges, the device is no longer compliant with standards and the corresponding certificates lose their validity. This status is shown on the display by the identifier "ncnf." Settings outside of this range are therefore within the operator's scope of responsibility and/or the acceptance authority of the system.
Possible range	Technically possible setting range

6 Safety concept

The system consists of three microcontrollers. CH_A and CH_B are the measuring channels. These channels record, calculate and monitor the measured values, read the input for the feedback contact and independently switch the associated relay. Both measuring channels are structurally redundant (e.g., voltage reference, time base). The third controller CH_D observes both measuring channels for deviations, controls the user interface (LEDs, display, keys) and non-safety-relevant inputs and outputs.

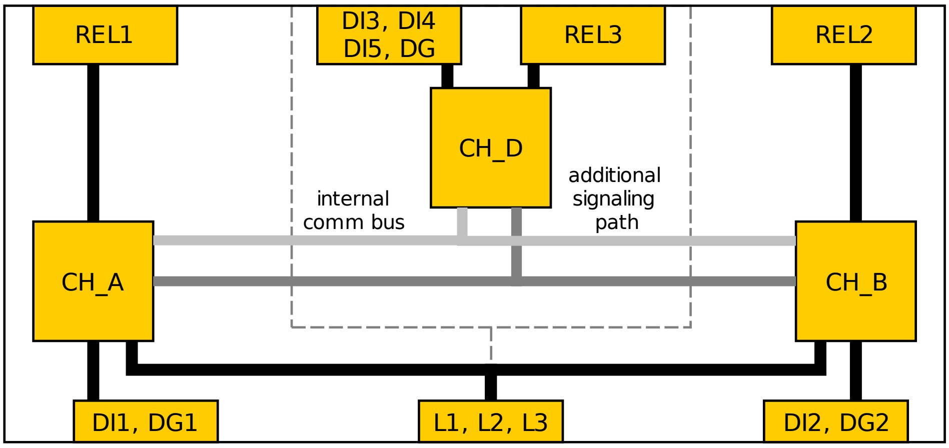

Errors are divided into three classes:

1. **Exceeded limit**
   This is a normal operating condition. This includes, among other things, the detection of overvoltage or underfrequency. These faults are handled according to the normative specification. Usually, the relays of CH_A and CH_B are switched off after a trigger delay. After the error is no longer detected and all other parameters are within the permissible limits, the relays are switched on again after a switch-on delay.

2. **Non-critical system errors**
   These errors indicate a problem but are not safety critical. This includes a supply voltage that is too low, a feedback contact that is detected as open and should be closed or internal communication errors.

3. **Critical system errors**
   These errors are safety-critical errors. This includes an extremely high measurement variance of the two measurement channels, thus the memory integrity is not given. If such a fault is detected, the system goes into the safety state (relay in idle state – OFF).

System error:

T	Remote shutdown activated
0	CH_A or CH_B contains invalid software (CODEID)
1	Software in CH_A and CH_B is differently (CODEVERS)
2	Incorrect checksum of the code memory (CODECRC)
3	Incorrect checksum of the firmware (currently not used - FLASHCRC)
4	Incorrect checksum of the EEPROM (EEPROMCRC)
5	Configuration is inconsistent (LOGICVERS)
6	Incorrect checksum of the configuration (LOGICCRC)
7	Allocated
8	Error in the supply voltage for the outputs (POWER6V)
9	Error in the supply voltage for the inputs (POWERDIGINP)
A	Deviation of the measuring channels (MEASCOMPAB)
B	Password request deactivated (PWDINACTIVE)
C	Measuring channel does not communicate internally (INTERCOM1)
D	Allocated
E	Allocated
F	Allocated

7 Glossary

OVE	Austrian Association for Electrical Engineering
TOR	Technical and organizational rules (Austria)
OOE	Upper Austria
W	Vienna
NS	Low voltage
MS	Medium voltage
VDE	Association of Electrical Engineering
AR	Connection rules
NA/EEA- CH	Grid installations/self-generation systems-Switzerland
AS	Australia
NZS	New Zealand
DK	Denmark
IP	Interface Protection
ASS	Automatic Separation System

8 Available Standards

8.1 Currently Valid Standards

				Number of channels		
Slot	**ID**	**Norm/Standard**	**Regions**	**1**	**2** Funct. safety	**1** or **2** select able
#00	802	OVE TOR R25 NS SYNC	Austria (low voltage)		**X**	
#01	803	OVE TOR R25 NS ASYNC	Austria (low voltage)		**X**	
#02	852	OVE TOR R25 MS SYNC	Austria (medium voltage)		**X**	
#03	853	OVE TOR R25 MS ASYNC	Austria (medium voltage)		**X**	
#04	822	OOE TOR R25 NS SYNC	Upper Austria Oberösterreich (low voltage)		**X**	
#05	823	OOE TOR R25 NS ASYNC	Upper Austria Oberösterreich (low voltage)		**X**	
#06	872	OOE TOR R25 MS SYNC	Upper Austria Oberösterreich (medium voltage)		**X**	
#07	873	OOE TOR R25 MS ASYNC	Upper Austria Oberösterreich (medium voltage)		**X**	
#08	832	W TOR R25 NS SYNC	Vienna (low voltage)		**X**	
#09	833	W TOR R25 NS ASYNC	Vienna (low voltage)		**X**	
#10	882	W TOR R25 MS SYNC	Vienna (medium voltage)		**X**	
#11	883	W TOR R25 MS ASYNC	Vienna (medium voltage)		**X**	
#12	812	TIROL TOR NS SYNC	Tyrol (low voltage)		**X**	
#13	813	TIROL TOR NS ASYNC	Tyrol (low voltage)		**X**	
#14	862	TIROL TOR MS SYNC	Tyrol (medium voltage)		**X**	

#15	863	TIROL TOR MS ASYNC	Tyrol (medium voltage)		**X**	
#16	842	B TOR R25 NS SYNC	Burgenland (low voltage)		**X**	
#17	843	B TOR R25 NS ASYNC	Burgenland (low voltage)		**X**	
#18	892	B TOR R25 MS SYNC	Burgenland (medium voltage)		**X**	
#19	893	B TOR R25 MS ASYNC	Burgenland (medium voltage)		**X**	
#20	311	VDE-AR-N 4105: 2018 (Pn ≤ 50kW)	Germany (low voltage)	**X**		
#21	312	VDE-AR-N 4105: 2018 (Pn > 50kW)	Germany (low voltage)	**X**		
#22	313	VDE-AR-N 4105: 2018 (converter)	Germany (low voltage)		**X**	
#23	707	VDE-AR-N 4110: 2018 (Pn > 135kW)	Germany (medium voltage)	**X**		
#24	102	CEI 0-21: 2019	Italy	**X**		
#25	410	G99/1/3: 2018 LV	Great Britain (low voltage)	**X**		
#26	460	G99/1/3: 2018 HV	Great Britain (medium/high voltage)	**X**		
#27	510	G98/1/2: 2018	Great Britain (low voltage)	**X**		
#28	603	C10-11: 2021 LV-IP	Belgium (low voltage) interface protection	**X**		
#29	602	C10-11: 2019 LV-ASS	Belgium (low voltage) automatic separation system	**X**		
#30	653	C10-11: 2021 HV-IP	Belgium (medium/high voltage) interface protection	**X**		
#31	652	C10-11: 2019 HV-ASS	Belgium (medium/high voltage) automatic separation system	**X**		
#32	1200	NA/EEA- CH 2014 (Type A)	Switzerland 2014 (low voltage)		**X**	
#33	1220	NA/EEA-NE7 - CH 2020 (Type A)	Switzerland 2020 (low voltage)		**X**	

#34	1221	NA/EEA-NE7 - CH 2020 (Type B)	Switzerland 2020 (low voltage)		X	
#35	901	EN 50549-1:2019	Europe LV (Netherlands)		X	
#36	926	EN 50549-2:2019	Europe HV (Netherlands)		X	
#37	905	EN 50549-1 Ireland	Europe LV (Ireland)		X	
#38	950	EN 50438: 2013 DK	Denmark			X
#39	910	SRPS EN 50549-1:2020	Europe LV (Serbia)		X	
#40	200	VDE V 0126-1-1:2013	France, Turkey, Belgium, Greece, ...		X	
#41	1300	Romania ANRE 2021	Romania		X	
#42	1110	AB AS 4777.2:2020	Australia		X	
#43	1120	C AS 4777.2:2020	Australia		X	
#44	1130	NZS 4777.2:2020	New Zealand		X	
#45	1135	NSW-Augrid 23	Australia		X	
#46	1140	NSW-Essential 23	Australia		X	
#47	1145	NSW-Endeavour 23	Australia		X	
#48	1150	VIC-United Energy 23	Australia		X	
#49	1155	VIC-Ausnet Energy 23	Australia		X	
#50	1160	VIC-Citipower 23	Australia		X	
#51	1165	VIC-Jemana 23	Australia		X	
#52	1170	VIC-Powercor 23	Australia		X	

#53	1175	VIC-Western Power 23	Australia		**X**	
#54	1180	ACT-Evoenergy 23	Australia		**X**	
#55	1185	QLD-Energex 23	Australia		**X**	
#56	1190	QLD-Ergon 23	Australia		**X**	
#57	1195	SA-Power networks23	Australia		**X**	
#58	1000	NRS 097-2-1: 2017	South Africa		**X**	
#59	9006	OPEN SETUP	Freely configurable setup			**X**
#60	930	CZ-2024	Czech republic			**X**
#61	940	EN50549-1: SI Uf A/B	Slovenia Low Voltage		**X**	
#62	945	EN50549-2: SI Uf C	Slovenia Medium Voltage		**X**	
#63	1400	Bulgaria LV 2024	Bulgaria Low Voltage			**X**
#64	1450	Bulgaria MV 2024	Bulgaria Medium Voltage			**X**

8.2 Recertified / Obsolete Standards

Recertified Standards						
#52	900	EN 50438:2013	Europe		X	
#53	801	OVE E 8001/8101:2014	Austria		**X**	
#54	300	VDE-AR-N 4105 tested according to VDE 0124-100:2013	Germany (low voltage)		**X**	
#55	700	TR3 Rev23:2013 certified according to BDEW 2008	Germany (medium voltage)	**X**		
#56	1102	AS/NZS 4777.2:2015	Australia / Victoria (New Zealand)		**X**	
#57	405	G59/3/3: 2015 LV	Great Britain (low voltage)	**X**		
#58	455	G59/3/3: 2015 MV	Great Britain (high voltage)	**X**		
#59	500	G83/2: 2012	Great Britain (low voltage)	**X**		
#60	600	C10-11: 2012 LV	Belgium (low voltage)	**X**		
#61	650	C10-11: 2012 MV	Belgium medium voltage	**X**		
#62	601	C10-11: 2019 LV	Belgium (low voltage)	**X**		
#63	651	C10-11: 2019 HV	Belgium (high voltage)	**X**		

9 Overview of the implemented configurations

9.1 OVE TOR R25 NS SYNC (Type A/B low voltage for sync. generators)

- Selectable connection mode (1-phase, 3-phase)
- Selectable nominal voltage
- Selectable feedback contact (normally closed / normally open)
- Selectable remote shutdown (normally closed / normally open)
- 2 Overvoltage threshold - phase to neutral voltage
- 2 Undervoltage thresholds - phase to neutral voltage
- 10-minute average Overvoltage threshold
- 1 Over frequency threshold
- 1 Underfrequency threshold
- switch-on delay
- Signal relay R3 - activation (LED R3 ON) when a protective function U / f responds or in the event of a feedback contact error

9.2 OVE TOR R25 NS ASYNC (Type A/B low voltage for async. generators)

- Selectable connection mode (1-phase, 3-phase)
- Selectable nominal voltage
- Selectable feedback contact (normally closed / normally open)
- Selectable remote shutdown (normally closed / normally open)
- 2 Overvoltage threshold - phase to neutral voltage
- 2 Undervoltage thresholds - phase to neutral voltage
- 10-minute average Overvoltage threshold
- 1 Over frequency threshold
- 1 Underfrequency threshold
- switch-on delay
- Signal relay R3 - activation (LED R3 ON) when a protective function U / f responds or in the event of a feedback contact error

9.3 OVE TOR R25 MS SYNC (Type A/B medium voltage for sync. generators)

- Selectable connection mode (1-phase, 3-phase)
- Selectable nominal voltage
- Selectable feedback contact (normally closed / normally open)
- Selectable remote shutdown (normally closed / normally open)
- 2 Overvoltage threshold - phase to phase voltage
- 2 Undervoltage thresholds - phase to phase voltage
- 1 Over frequency threshold
- 1 Underfrequency threshold
- switch-on delay
- Signal relay R3 - activation (LED R3 ON) when a protective function U / f responds or in the event of a feedback contact error

9.4 OVE TOR R25 MS ASYNC (Type A/B medium voltage for async. generators)

- Selectable connection mode (1-phase, 3-phase)
- Selectable nominal voltage
- Selectable feedback contact (normally closed / normally open)
- Selectable remote shutdown (normally closed / normally open)
- 2 Overvoltage threshold - phase to phase voltage
- 2 Undervoltage thresholds - phase to phase voltage
- 1 Over frequency threshold
- 1 Underfrequency threshold
- switch-on delay
- Signal relay R3 - activation (LED R3 ON) when a protective function U / f responds or in the event of a feedback contact error

9.5 OOE TOR R25 NS SYNC (Type A/B low voltage for sync. generators)

- Selectable connection mode (1-phase, 3-phase)
- Selectable nominal voltage
- Selectable feedback contact (normally closed / normally open)
- Selectable remote shutdown (normally closed / normally open)
- 1 Overvoltage threshold - phase to neutral voltage
- 2 Undervoltage thresholds - phase to neutral voltage
- 10-minute average Overvoltage threshold
- 1 Over frequency threshold
- 1 Underfrequency threshold
- switch-on delay
- Signal relay R3 - activation (LED R3 ON) when a protective function U / f responds or in the event of a feedback contact error

9.6 OOE TOR R25 NS ASYNC (Type A/B low voltage for async. generators)

- Selectable connection mode (1-phase, 3-phase)
- Selectable nominal voltage
- Selectable feedback contact (normally closed / normally open)
- Selectable remote shutdown (normally closed / normally open)
- 1 Overvoltage threshold - phase to neutral voltage
- 2 Undervoltage thresholds - phase to neutral voltage
- 10-minute average Overvoltage threshold
- 1 Over frequency threshold
- 1 Underfrequency threshold
- switch-on delay
- Signal relay R3 - activation (LED R3 ON) when a protective function U / f responds or in the event of a feedback contact error

9.7 OOE TOR R25 MS SYNC (Type A/B medium voltage for sync. generators)

- Selectable connection mode (1-phase, 3-phase)
- Selectable nominal voltage
- Selectable feedback contact (normally closed / normally open)
- Selectable remote shutdown (normally closed / normally open)
- 2 Overvoltage threshold - phase to phase voltage
- 2 Undervoltage thresholds - phase to phase voltage
- 10-minute average Overvoltage threshold
- 1 Over frequency threshold
- 1 Underfrequency threshold
- switch-on delay
- Signal relay R3 - activation (LED R3 ON) when a protective function U / f responds or in the event of a feedback contact error

9.8 OOE TOR R25 MS ASYNC (Type A/B medium voltage for async. generators)

- Selectable connection mode (1-phase, 3-phase)
- Selectable nominal voltage
- Selectable feedback contact (normally closed / normally open)
- Selectable remote shutdown (normally closed / normally open)
- 2 Overvoltage threshold - phase to phase voltage
- 2 Undervoltage thresholds - phase to phase voltage
- 10-minute average Overvoltage threshold
- 1 Over frequency threshold
- 1 Underfrequency threshold
- switch-on delay
- Signal relay R3 - activation (LED R3 ON) when a protective function U / f responds or in the event of a feedback contact error

9.9 W TOR R25 NS SYNC (Type A/B low voltage for sync. generators)

- Selectable connection mode (1-phase, 3-phase)
- Selectable nominal voltage
- Selectable feedback contact (normally closed / normally open)
- Selectable remote shutdown (normally closed / normally open)
- 2 Overvoltage threshold - phase to neutral voltage
- 2 Undervoltage thresholds - phase to neutral voltage
- 10-minute average Overvoltage threshold
- 1 Over frequency threshold
- 1 Underfrequency threshold
- switch-on delay
- Signal relay R3 - activation (LED R3 ON) when a protective function U / f responds or in the event of a feedback contact error

9.10 W TOR R25 NS ASYNC (Type A/B low voltage for async. generators)

- Selectable connection mode (1-phase, 3-phase)
- Selectable nominal voltage
- Selectable feedback contact (normally closed / normally open)
- Selectable remote shutdown (normally closed / normally open)
- 2 Overvoltage threshold - phase to neutral voltage
- 2 Undervoltage thresholds - phase to neutral voltage
- 10-minute average Overvoltage threshold
- 1 Over frequency threshold
- 1 Underfrequency threshold
- switch-on delay
- Signal relay R3 - activation (LED R3 ON) when a protective function U / f responds or in the event of a feedback contact error

9.11 W TOR R25 MS SYNC (Type A/B medium voltage for sync. generators)

- Selectable connection mode (1-phase, 3-phase)
- Selectable nominal voltage
- Selectable feedback contact (normally closed / normally open)
- Selectable remote shutdown (normally closed / normally open)
- 2 Overvoltage threshold - phase to phase voltage
- 2 Undervoltage thresholds - phase to phase voltage
- 1 Over frequency threshold
- 1 Underfrequency threshold
- switch-on delay
- Signal relay R3 - activation (LED R3 ON) when a protective function U / f responds or in the event of a feedback contact error

9.12 W TOR R25 MS ASYNC (Type A/B medium voltage for async. generators)

- Selectable connection mode (1-phase, 3-phase)
- Selectable nominal voltage
- Selectable feedback contact (normally closed / normally open)
- Selectable remote shutdown (normally closed / normally open)
- 2 Overvoltage threshold - phase to phase voltage
- 2 Undervoltage thresholds - phase to phase voltage
- 1 Over frequency threshold
- 1 Underfrequency threshold
- switch-on delay
- Signal relay R3 - activation (LED R3 ON) when a protective function U / f responds or in the event of a feedback contact error

9.13 TIROL TOR NS SYNC (Type A/B low voltage for sync. generators)

- Selectable connection mode (1-phase, 3-phase)
- Selectable nominal voltage
- Selectable feedback contact (normally closed / normally open)
- Selectable remote shutdown (normally closed / normally open)
- 2 Overvoltage threshold - phase to phase voltage
- 2 Undervoltage thresholds - phase to phase voltage
- 10 minutes average overvoltage threshold
- 1 Over frequency threshold
- 1 Underfrequency threshold
- switch-on delay
- Signal relay R3 - activation (LED R3 ON) when a protective function U / f responds or in the event of a feedback contact error

9.14 TIROL TOR NS ASYNC (Type A/B low voltage for async. generators)

- Selectable connection mode (1-phase, 3-phase)
- Selectable nominal voltage
- Selectable feedback contact (normally closed / normally open)
- Selectable remote shutdown (normally closed / normally open)
- 2 Overvoltage threshold - phase to phase voltage
- 2 Undervoltage thresholds - phase to phase voltage
- 10 minutes average overvoltage threshold
- 1 Over frequency threshold
- 1 Underfrequency threshold
- switch-on delay
- Signal relay R3 - activation (LED R3 ON) when a protective function U / f responds or in the event of a feedback contact error

9.15 TIROL TOR MS SYNC (Type A/B medium voltage for sync. generators)

- Selectable connection mode (1-phase, 3-phase)
- Selectable nominal voltage
- Selectable feedback contact (normally closed / normally open)
- Selectable remote shutdown (normally closed / normally open)
- 2 Overvoltage threshold - phase to phase voltage
- 2 Undervoltage thresholds - phase to phase voltage
- 1 Over frequency threshold
- 1 Underfrequency threshold
- switch-on delay
- Signal relay R3 - activation (LED R3 ON) when a protective function U / f responds or in the event of a feedback contact error

9.16 TIROL TOR MS ASYNC (Type A/B medium voltage for async. generators)

- Selectable connection mode (1-phase, 3-phase)
- Selectable nominal voltage
- Selectable feedback contact (normally closed / normally open)
- Selectable remote shutdown (normally closed / normally open)
- 2 Overvoltage threshold - phase to phase voltage
- 2 Undervoltage thresholds - phase to phase voltage
- 1 Over frequency threshold
- 1 Underfrequency threshold
- switch-on delay
- Signal relay R3 - activation (LED R3 ON) when a protective function U / f responds or in the event of a feedback contact error

9.17 VDE-AR-N 4105:2018-11 (Pn ≤ 50 kW)

- Selectable connection mode (1-phase, 3-phase)
- Selectable feedback contact (normally closed / normally open)
- Additional monitoring of the feedback contact when switching on
- Selectable remote shutdown (normally closed / normally open)
- 1 Overvoltage threshold - phase to phase voltage
- 1 Undervoltage threshold - phase to phase voltage
- 1 Overvoltage threshold - phase-to-neutral voltage
- 1 Undervoltage threshold - phase-to-neutral voltage
- 10-minute average Overvoltage threshold
- 1 Over frequency threshold
- 1 Underfrequency threshold
- 1 random over-frequency threshold (can be activated if required)
- switch-on delay
- random switch-on delay (can be activated if required)
- Signal relay R3 - activation (LED R3 ON) in the event of a feedback contact error

9.18 VDE-AR-N 4105:2018-11 (Pn > 50 kW)

- Selectable connection mode (1-phase, 3-phase)
- Selectable feedback contact (normally closed / normally open)
- Additional monitoring of the feedback contact when switching on
- Selectable remote shutdown (normally closed / normally open)
- 1 Overvoltage threshold - phase to phase voltage
- 2 undervoltage thresholds - phase to phase voltage
- 1 Overvoltage threshold - phase-to-neutral voltage
- 2 undervoltage thresholds - phase-to-neutral voltage
- 10-minute average Overvoltage threshold
- 1 Over frequency threshold
- 1 Underfrequency threshold
- 1 random over-frequency threshold (can be activated if required)
- switch-on delay
- random switch-on delay (can be activated if required)
- Signal relay R3 - activation (LED R3 ON) in the event of a feedback contact error

9.19 VDE-AR-N 4105:2018-11 (inverter)

- Selectable connection mode (1-phase, 3-phase)
- Selectable feedback contact (normally closed / normally open)
- Additional monitoring of the feedback contact when switching on
- Selectable remote shutdown (normally closed / normally open)
- 1 Overvoltage threshold - phase to phase voltage
- 2 undervoltage thresholds - phase to phase voltage
- 1 Overvoltage threshold - phase-to-neutral voltage
- 2 undervoltage thresholds - phase-to-neutral voltage
- 10-minute average Overvoltage threshold
- 1 Over frequency threshold
- 1 Underfrequency threshold
- 1 random over-frequency threshold (can be activated if required)
- switch-on delay
- random switch-on delay (can be activated if required)
- Signal relay R3 - activation (LED R3 ON) in the event of a feedback contact error

9.20 VDE-AR-N 4110:2018-11 (tested according to TR3, evaluation report TR8)

- Selectable connection mode (1 phase, 3 phase)
- Selectable nominal voltage
- Selectable feedback contact (normally closed / normally open)
- Selectable remote shutdown (normally closed / normally open)
- 2 Overvoltage thresholds - phase to phase voltage (auto-selection depending on Connection Mode)
- 2 undervoltage thresholds - phase to phase voltage (auto-selection depending on Connection Mode)
- 2 Overvoltage thresholds - phase-to-neutral voltage (autom. selection depending on Connection Mode)
- 2 undervoltage thresholds - phase-to-neutral voltage (autom. selection depending on Connection Mode)
- 2 over-frequency thresholds
- 1 Underfrequency threshold
- switch-on delay

9.21 CEI 0-21:2019

- Selectable connection mode (1-phase, 3-phase)
- Selectable operational mode (transitory mode / definitive mode)
- Selectable feedback contact (normally opened/normally closed)
- Selectable remote shutdown (normally closed / normally open)
- 1 overvoltage threshold - phase to phase volt. (autom. selection depending on connection mode)
- 2 undervoltage thresholds - phase to phase volt. (autom. selection depending on connection mode)
- 1 overvoltage threshold - phase-to-neutral volt. (autom. selection depending on connection mode)
- 2 undervoltage threshold - phase-to-neutral volt. (autom. selection depending on connection mode)
- 10 minutes average overvoltage threshold
- 3 switchable over-frequency thresholds (switchover via operational mode and digital inputs)
- 3 switchable under-frequency thresholds (switchover via operational mode and digital inputs)
- 1 Frequency ramp threshold (RoCoF ... can be activated if required), RoCoF-Window changeable
- Selectable RoCoF window length
- Turn-on delay
- Signal relay R3 - activation (LED R3 ON) in the event of a feedback contact error

9.22 G99/1/3 LV:2018 (low voltage)

- Selectable nominal voltage
- Selectable feedback contact (normally closed / normally open)
- Selectable remote shutdown (normally closed / normally open)
- 2 overvoltage thresholds - phase-to-neutral voltage
- 1 Undervoltage threshold - phase-to-neutral voltage
- 1 Over frequency threshold
- 2 Under frequency thresholds
- 1 Frequency ramp threshold (RoCoF ... can be activated if required)
- 1 phase jump threshold (PShift ... can be deactivated if required)
- switch-on delay

9.23 G99/1/3 HV:2018 (medium/high voltage)

- Selectable nominal voltage
- Selectable feedback contact (normally closed / normally open)
- Selectable remote shutdown (normally closed / normally open)
- 2 overvoltage thresholds - phase to phase voltage
- 1 Undervoltage threshold - phase to phase voltage
- 1 Over frequency threshold
- 2 Under frequency thresholds
- 1 Frequency ramp threshold (RoCoF ... can be activated if required)
- 1 phase jump threshold (PShift ... can be deactivated if required)
- switch-on delay

9.24 G98/1/2:2018 (low voltage)

- Selectable nominal voltage
- Selectable feedback contact (normally closed / normally open)
- Selectable remote shutdown (normally closed / normally open)
- 2 overvoltage thresholds - phase-to-neutral voltage
- 1 Undervoltage threshold - phase-to-neutral voltage
- 1 Over frequency threshold
- 2 under-frequency thresholds
- 1 Frequency ramp threshold (RoCoF ... can be activated if required)
- 1 phase jump threshold (PShift ... can be deactivated if required)
- switch-on delay

9.25 C10-11 2019 LV-IP (Interface Protection / low voltage)

- Selectable connection mode (1-phase, 3-phase)
- Selectable nominal voltage
- Selectable feedback contact (normally opened/normally closed)
- Additional time monitoring of the feedback contact
- Selectable remote shutdown (normally closed / normally open)
- 2 Overvoltage threshold - phase-to-neutral voltage
- 2 Undervoltage thresholds - phase-to-neutral voltage
- 1 Overvoltage threshold Zero Sequence
- activation narrower frequency window (anfw) at Undervoltage
- activation narrower frequency window (anfw) at Zero Sequence
- activation narrower frequency window (anfw) with digital input (DI5)
- 1 Over frequency threshold´
- 1 Over frequency threshold at activation narrower frequency window (anfw)
- 1 Underfrequency threshold
- 1 Underfrequency threshold at activation narrower frequency window (anfw)
- 1 Frequency ramp threshold (RoCoF ... can be activated if required)
- 1 Phase shift threshold (PShift ... can be deactivated if required)
- Turn-on delay
- Signal relay R3 - activation (LED R3 ON) in the event of a feedback contact error

9.26 C10-11 2019 LV-ASS (Automatic Separation System / low voltage)

- Selectable connection mode (1-phase, 3-phase)
- Selectable nominal voltage
- Selectable feedback contact (normally opened/normally closed)
- Additional time monitoring of the feedback contact
- Selectable remote shutdown (normally closed / normally open)
- 1 Overvoltage threshold - phase-to-neutral voltage
- 1 Undervoltage thresholds - phase-to-neutral voltage
- 10 minutes average overvoltage threshold
- 1 Over frequency threshold
- 1 Under frequency threshold
- 1 Frequency ramp threshold (RoCoF … can be activated if required)
- 1 Phase shift threshold (PShift … can be deactivated if required)
- Turn-on delay
- Signal relay R3 - activation (LED R3 ON) in the event of a feedback contact error

9.27 C10-11:2019 HV-IP (Interface Protection / high voltage)

- Selectable connection mode (1-phase, 3-phase)
- Selectable nominal voltage
- Selectable feedback contact (normally opened/normally closed)
- Additional time monitoring of the feedback contact
- Selectable remote shutdown (normally closed / normally open)
- 2 Overvoltage threshold - phase-to-neutral voltage
- 2 Undervoltage thresholds - phase to phase voltage
- activation narrower frequency window (anfw) at Undervoltage
- activation narrower frequency window (anfw) with digital input (DI5)
- 1 Over frequency threshold
- 1 Over frequency threshold at activation narrower frequency window (anfw)
- 1 Under frequency threshold
- 1 Underfrequency threshold at activation narrower frequency window (anfw)
- 1 Frequency ramp threshold (RoCoF … can be activated if required)
- 1 Phase shift threshold (PShift … can be deactivated if required)
- Turn-on delay
- Signal relay R3 - activation (LED R3 ON) in the event of a feedback contact error

9.28 C10-11:2019 HV-ASS (Automatic Separation System /high voltage)

- Selectable connection mode (1-phase, 3-phase)
- Selectable nominal voltage
- Selectable feedback contact (normally opened/normally closed)
- Additional time monitoring of the feedback contact
- Selectable remote shutdown (normally closed / normally open)
- 1 Overvoltage threshold - phase-to-neutral voltage
- 1 Undervoltage thresholds - phase to phase voltage
- 10 minutes average overvoltage threshold
- 1 Over frequency threshold
- 1 Under frequency threshold
- 1 Frequency ramp threshold (RoCoF … can be activated if required)
- 1 Phase shift threshold (PShift … can be deactivated if required)
- Turn-on delay
- Signal relay R3 - activation (LED R3 ON) in the event of a feedback contact error

9.29 NA/EEA- CH 2014 Type A up to 1MW (Low Voltage)

- Selectable connection mode (1-phase, 3-phase)
- Selectable nominal voltage
- Selectable feedback contact (normally closed / normally open)
- Selectable remote shutdown (normally closed / normally open)
- 2 Overvoltage thresholds - phase to phase voltage
- 1 Undervoltage threshold - phase to phase voltage
- 2 Overvoltage thresholds - phase to neutral voltage
- 1 Undervoltage threshold - phase to neutral voltage
- 10-minute average Overvoltage threshold
- 1 Over frequency threshold
- 1 Underfrequency threshold
- switch-on delay
- Signal relay R3 - activation (LED R3 ON) when a protective function U / f responds or in the event of a feedback contact error

9.30 NA/EEA-NE7 - CH 2020 Type A 800W to 250kW (Low Voltage)

- Selectable connection mode (1-phase, 3-phase)
- Selectable nominal voltage
- Selectable feedback contact (normally closed / normally open)
- Selectable remote shutdown (normally closed / normally open)
- 2 Overvoltage thresholds - phase to phase voltage
- 2 Undervoltage thresholds - phase to phase voltage
- 2 Overvoltage thresholds - phase to neutral voltage
- 2 Undervoltage thresholds - phase to neutral voltage
- 10-minute average Overvoltage threshold
- 1 Over frequency threshold
- 1 Underfrequency threshold
- 1 Frequency ramp threshold (RoCoF ... can be activated if required)
- switch-on delay
- Signal relay R3 - activation (LED R3 ON) when a protective function U / f responds or in the event of a feedback contact error

9.31 NA/EEA-NE7 - CH 2020 Type B 250kW to 36MW (Low Voltage)

- Selectable connection mode (1-phase, 3-phase)
- Selectable nominal voltage
- Selectable feedback contact (normally closed / normally open)
- Selectable remote shutdown (normally closed / normally open)
- 2 Overvoltage thresholds - phase to phase voltage
- 2 Undervoltage thresholds - phase to phase voltage
- 2 Overvoltage thresholds - phase to neutral voltage
- 2 Undervoltage thresholds - phase to neutral voltage
- 10-minute average Overvoltage threshold
- 1 Over frequency threshold
- 1 Underfrequency threshold
- 1 Frequency ramp threshold (RoCoF ... can be activated if required)
- switch-on delay
- Signal relay R3 - activation (LED R3 ON) when a protective function U / f responds or in the event of a feedback contact error

9.32 EN 50549-1:2019 LV (Niederlande)

- Selectable connection mode (1-phase, 3-phase)
- Selectable nominal voltage
- Selectable safety mode (1 contactor or 2 contactors controlled and monitored)
- Selectable feedback contact (normally opened/normally closed)
- Selectable remote shutdown (normally closed / normally open)
- 2 Overvoltage thresholds - phase to phase voltage
- 2 Undervoltage thresholds - phase to phase voltage
- 2 Overvoltage thresholds - phase to neutral voltage
- 2 Undervoltage thresholds - phase to neutral voltage
- 1 Overvoltage threshold Zero Sequence
- 10-minute average Overvoltage threshold
- activation narrower frequency window (anfw) at Undervoltage
- activation narrower frequency window (anfw) at Zero Sequence
- activation narrower frequency window (anfw) with digital input (DI5)
- 1 Over frequency threshold´
- 1 Over frequency threshold at activation narrower frequency window (anfw)
- 1 Underfrequency threshold
- 1 Underfrequency threshold at activation narrower frequency window (anfw)
- 1 Frequency ramp threshold (RoCoF … can be activated if required)
- 1 phase shift threshold (PShift … can be activated if required)
- Turn-on delay

9.33 EN 50549-2:2019 HV (Niederlande)

- Selectable connection mode (1-phase, 3-phase)
- Selectable nominal voltage
- Selectable safety mode (1 contactor or 2 contactors controlled and monitored)
- Selectable feedback contact (normally opened/normally closed)
- Selectable remote shutdown (normally closed / normally open)
- 2 Overvoltage thresholds - phase to phase voltage
- 2 Undervoltage thresholds - phase to phase voltage
- 2 Overvoltage thresholds - phase to neutral voltage
- 2 Undervoltage thresholds - phase to neutral voltage
- 1 Overvoltage threshold Zero Sequence
- 10-minute average Overvoltage threshold
- activation narrower frequency window (anfw) at Undervoltage
- activation narrower frequency window (anfw) at Zero Sequence
- activation narrower frequency window (anfw) with digital input (DI5)
- 1 Over frequency threshold´
- 1 Over frequency threshold at activation narrower frequency window (anfw)
- 1 Underfrequency threshold
- 1 Underfrequency threshold at activation narrower frequency window (anfw)
- 1 Frequency ramp threshold (RoCoF … can be activated if required)
- 1 phase shift threshold (PShift … can be activated if required)
- Turn-on delay

9.34 EN 50438:2013 (DK)

- Selectable connection mode (1-phase, 3-phase)
- Selectable nominal voltage
- Selectable safety mode (1 contactor or 2 contactors controlled and monitored)
- Selectable feedback contact (normally opened/normally closed)
- Selectable remote shutdown (normally closed / normally open)
- 2 Overvoltage thresholds - phase to phase voltage
- 1 Undervoltage threshold - phase to phase voltage
- 2 Overvoltage thresholds - phase-to-neutral voltage
- 1 Undervoltage threshold - phase-to-neutral voltage
- 1 Over frequency threshold
- 1 Under frequency threshold
- 1 frequency ramp threshold (RoCoF .. can be deactivated if required)
- Turn-on delay

9.35 VDE 0126-1-1:2013 (ERDF-NOI-RES_13E Frankreich)

- Selectable feedback contact (normally opened/normally closed)
- Selectable remote shutdown (normally closed / normally open)
- 1 Overvoltage threshold - phase to phase voltage
- 1 Undervoltage threshold - phase to phase voltage
- 1 Overvoltage threshold - phase-to-neutral voltage
- 1 Undervoltage threshold - phase-to-neutral voltage
- 10 minutes average overvoltage threshold
- 1 Over frequency threshold
- 1 Under frequency threshold
- 1 Random over-frequency threshold (can be activated if required)
- Turn-on delay
- Random turn-on delay (can be activated if required)

9.36 AB AS 4777.2:2020

- Selectable connection mode (1-phase, 3-phase)
- Selectable nominal voltage
- Selectable feedback contact (normally closed / normally open)
- Selectable remote shutdown (normally closed / normally open)
- 2 Overvoltage thresholds - phase to neutral voltage
- 2 Undervoltage thresholds - phase to neutral voltage
- 10-minute average Overvoltage threshold
- 1 Over frequency threshold
- 1 Underfrequency threshold
- 1 Frequency ramp threshold (RoCoF … can be activated if required)
- Selectable RoCoF window length
- 1 phase shift threshold (PShift … can be activated if required)
- Selectable Pshift window length
- Turn-on delay
- Signal relay R3 - activation (LED R3 ON) when a protective function U / f responds or in the event of a feedback contact error

9.37 C AS 4777.2:2020

- Selectable connection mode (1-phase, 3-phase)
- Selectable nominal voltage
- Selectable feedback contact (normally closed / normally open)
- Selectable remote shutdown (normally closed / normally open)
- 2 Overvoltage thresholds - phase to neutral voltage
- 2 Undervoltage thresholds - phase to neutral voltage
- 10-minute average Overvoltage threshold
- 1 Over frequency threshold
- 1 Underfrequency threshold
- 1 Frequency ramp threshold (RoCoF … can be activated if required)
- Selectable RoCoF window length
- 1 phase shift threshold (PShift … can be activated if required)
- Selectable Pshift window length
- Turn-on delay
- Signal relay R3 - activation (LED R3 ON) when a protective function U / f responds or in the event of a feedback contact error

9.38 NZS 4777.2:2020

- Selectable connection mode (1-phase, 3-phase)
- Selectable nominal voltage
- Selectable feedback contact (normally closed / normally open)
- Selectable remote shutdown (normally closed / normally open)
- 2 Overvoltage thresholds - phase to neutral voltage
- 2 Undervoltage thresholds - phase to neutral voltage
- 10-minute average Overvoltage threshold
- 1 Over frequency threshold
- 1 Underfrequency threshold
- 1 Frequency ramp threshold (RoCoF … can be activated if required)
- Selectable RoCoF window length
- 1 phase shift threshold (PShift … can be activated if required)
- Selectable Pshift window length
- Turn-on delay
- Signal relay R3 - activation (LED R3 ON) when a protective function U / f responds or in the event of a feedback contact error

9.39 NRS 097-2-1: 2017

- Selectable connection mode (1-phase, 3-phase)
- Selectable nominal voltage
- Selectable feedback contact (normally opened/normally closed)
- Selectable remote shutdown (normally closed / normally open)
- 2 overvoltage thresholds - phase to phase voltage (automatic selection depending on connection mode)
- 2 undervoltage thresholds - phase to phase voltage (autom. selection depending on connection mode)
- 2 overvoltage thresholds - phase-to-neutral voltage (autom. selection depending on connection mode)
- 2 undervoltage thresholds - phase-to-neutral voltage (autom. selection depending on connection mode)
- 1 Over frequency thresholds
- 1 Under frequency thresholds
- 1 Random over-frequency threshold (can be activated if required)
- 1 Frequency ramp threshold (RoCoF ... can be deactivated if required)
- 1 Phase shift threshold (PShift … can be activated if required)
- Turn-on delay
- Random turn-on delay (can be activated if required)
- Signal relay R3 - activation (LED R3 ON) when a protective function U / f responds or in the event of a feedback contact error

9.40 OPEN SETUP

- Selectable connection mode (1-phase, 3-phase)
- Selectable nominal voltage
- Selectable safety mode (1 contactor or 2 contactors controlled and monitored)
- Selectable feedback contact (normally opened/normally closed)
- Selectable remote shutdown (normally closed / normally open)
- 2 Overvoltage thresholds - phase to phase voltage (automatic selection depending on connection mode, can be manually deactivated if required)
- 2 Undervoltage thresholds - phase to phase voltage (automatic selection depending on connection mode, can be manually deactivated if required)
- 2 Overvoltage thresholds - phase-to-neutral voltage (automatic selection depending on connection mode, can be manually deactivated if required)
- 2 Undervoltage thresholds - phase-to-neutral voltage (automatic selection depending on connection mode, can be manually deactivated if required)
- 1 Overvoltage threshold Zero Sequence Component (in Connection Mode 4-wire (LN+LL) only)
- 10 minutes average overvoltage threshold (can be manually deactivated if required)
- 2 over-frequency thresholds (can be manually deactivated if required)
- 2 under-frequency thresholds (can be manually deactivated if required)
- 1 Overfrequency threshold activable for narrower frequency window (NAFW) (in Connection Mode 4-wire (LN+LL) only)
- 1 Underfrequency threshold activable for narrower frequency window (NAFW) (in Connection Mode 4-wire (LN+LL) only)
- Selectable frequency window length
- 1 Random over-frequency threshold (can be activated if required)
- 1 Frequency ramp threshold (RoCoF ... can be activated if required)
- Selectable RoCoF window length
- 1 phase shift threshold (PShift … can be activated if required)
- Selectable Pshift window length
- Turn-on delay
- Random turn-on delay (can be activated if required)
- Signal relay R3 - activation (LED R3 ON) when a protective function U / f responds or in the event of a feedback contact error
- Frequency thresholds able to be deactivated when in Undervoltage situation

9.41 EN 50438:2013

- Selectable nominal voltage
- Selectable feedback contact (normally opened/normally closed)
- Selectable remote shutdown (normally closed / normally open)
- 1 Overvoltage threshold - phase-to-neutral voltage
- 1 Undervoltage threshold - phase-to-neutral voltage
- 10 minutes average overvoltage threshold
- 1 Over frequency threshold
- 1 Underfrequency threshold
- Turn-on delay

9.42 E 8001/8101 (predecessor of OVE TOR R25)

- Selectable connection mode (1-phase, 3-phase)
- Selectable nominal voltage
- Selectable feedback contact (normally opened/normally closed)
- Selectable remote shutdown (normally closed / normally open)
- 2 Overvoltage thresholds - phase to phase voltage
- 2 Undervoltage thresholds - phase to phase voltage
- 2 Overvoltage thresholds - phase-to-neutral voltage
- 2 Undervoltage thresholds - phase-to-neutral voltage
- 10 minutes average overvoltage threshold
- 1 Overfrequency threshold
- 1 Underfrequency threshold
- Turn-on delay

9.43 VDE 0124-100:2013 (predecessor of VDE-AR-N 4105:2018-11)

- Selectable feedback contact (normally opened/normally closed)
- Selectable remote shutdown (normally closed / normally open)
- 1 Overvoltage threshold - phase to phase voltage
- 1 Undervoltage threshold - phase to phase voltage
- 1 Overvoltage threshold - phase-to-neutral voltage
- 1 Undervoltage threshold - phase-to-neutral voltage
- 10-minute average overvoltage threshold
- 1 Overfrequency threshold
- 1 Underfrequency threshold
- 1 Random overfrequency threshold (can be activated if required)
- Turn-on delay
- Random turn-on delay (can be activated if required)

9.44 TR3 Rev23:2013 (predecessor of VDE-AR-N 4110:2018-11)

- Selectable connection mode (1-phase, 3-phase)
- Selectable nominal voltage
- Selectable feedback contact (normally opened/normally closed)
- Selectable remote shutdown (normally closed / normally open)
- 1 overvoltage threshold - phase to phase voltage (autom. selection depending on connection mode)
- 2 undervoltage thresholds - phase to phase voltage (autom. selection depending on connection mode)
- 1 overvoltage threshold - phase-to-neutral voltage (autom. selection depending on connection mode)
- 2 undervoltage threshold - phase-to-neutral voltage (autom. selection depending on connection mode)
- 1 Over frequency threshold
- 1 Under frequency threshold
- Turn-on delay

9.45 AS/NZS 4777.2:2015 (low voltage)

- Local standards must be taken into account
- Selectable connection mode (1-phase, 3-phase)
- Selectable nominal voltage
- Selectable feedback contact (normally closed / normally open / none)
- Selectable remote shutdown (normally closed / normally open)
- 2 overvoltage thresholds - phase-to-neutral voltage
- 1 Undervoltage threshold - phase-to-neutral voltage
- 1 Over frequency threshold
- 1 Under frequency thresholds
- 1 Frequency ramp threshold (RoCoF ... can be deactivated if required)
- Selectable RoCoF window length
- 1 phase shift threshold (PShift ... can be deactivated if required)
- Selectable Pshift window length
- switch-on delay
- Signal relay R3 - activation (LED R3 ON) when a protective function U / f responds or in the event of a feedback contact error

9.46 G59/3/3:2015 LV (low voltage – predecessor of G99/1/3 LV:2018)

- Selectable nominal voltage
- Selectable feedback contact (normally opened/normally closed)
- Selectable remote shutdown (normally closed / normally open)
- 2 Overvoltage thresholds - phase-to-neutral voltage
- 2 Undervoltage thresholds - phase-to-neutral voltage
- 2 Over frequency thresholds
- 2 Underfrequency thresholds
- 1 Frequency ramp threshold (RoCoF … can be activated if required)
- 1 Phase shift threshold (PShift … can be deactivated if required)
- Turn-on delay

9.47 G59/3/3:2015 MV (high voltage – predecessor of G99/1/3 HV:2018)

- Selectable nominal voltage
- Selectable feedback contact (normally opened/normally closed)
- Selectable remote shutdown (normally closed / normally open)
- 2 Overvoltage thresholds - phase to phase voltage
- 2 Undervoltage thresholds - phase to phase voltage
- 2 Over frequency thresholds
- 2 Underfrequency thresholds
- 1 Frequency ramp threshold (RoCoF … can be activated if required)
- 1 Phase shift threshold (PShift … can be deactivated if required)
- Turn-on delay

9.48 G83/2:2012 (low voltage – predecessor of G98/1/2:2018)

- Selectable nominal voltage
- Selectable feedback contact (normally opened/normally closed)
- Selectable remote shutdown (normally closed / normally open)
- 2 Overvoltage thresholds - phase-to-neutral voltage
- 2 Undervoltage thresholds - phase-to-neutral voltage
- 2 Over frequency thresholds
- 2 Underfrequency thresholds
- 1 Frequency ramp threshold (RoCoF … can be activated if required)
- 1 Phase shift threshold (PShift … can be deactivated if required)
- Turn-on delay

9.49 C10-11:2012 LV (low voltage – predecessor of C10-11:2019)

- Selectable connection mode (1-phase, 3-phase)
- Selectable nominal voltage
- Selectable feedback contact (normally opened/normally closed)
- Selectable remote shutdown (normally closed / normally open)
- 1 Overvoltage threshold - phase-to-neutral voltage
- 2 Undervoltage thresholds - phase-to-neutral voltage
- 1 Over frequency threshold
- 1 Under frequency threshold
- 1 Frequency ramp threshold (RoCoF … can be activated if required)
- 1 Phase shift threshold (PShift … can be deactivated if required)
- Turn-on delay

9.50 C10-11:2012 MV (high voltage – predecessor of C10-11:2019)

- Selectable connection mode (1-phase, 3-phase)
- Selectable nominal voltage
- Selectable feedback contact (normally opened/normally closed)
- Selectable remote shutdown (normally closed / normally open)
- 1 Overvoltage threshold - phase to phase voltage
- 2 Undervoltage thresholds - phase to phase voltage
- 1 Over frequency threshold
- 1 Under frequency threshold
- 1 Frequency ramp threshold (RoCoF … can be activated if required)
- 1 Phase shift threshold (PShift … can be deactivated if required)
- Turn-on delay

9.51 C10-11:2019 LV-IP (Interface Protection / low Voltage – predecessor of C10-11:2021)

- Selectable connection mode (1-phase, 3-phase)
- Selectable nominal voltage
- Selectable safety mode (1 contactor or 2 contactors controlled and monitored)
- Selectable feedback contact (normally opened/normally closed)
- Selectable remote shutdown (normally closed / normally open)
- 2 Overvoltage thresholds - phase to phase voltage
- 2 Undervoltage thresholds - phase to phase voltage
- 1 Over frequency threshold
- 1 Underfrequency threshold
- 1 Frequency ramp threshold (RoCoF … can be activated if required)
- 1 phase shift threshold (PShift … can be activated if required)
- Turn-on delay
- Signal relay R3 - activation (LED R3 ON) when a protective function U / f responds or in the event of a feedback contact error

9.52 C10-11:2019 HV-IP (Interface Protection / high Voltage – predecessor of C10-11:2021))

- Selectable connection mode (1-phase, 3-phase)
- Selectable nominal voltage
- Selectable safety mode (1 contactor or 2 contactors controlled and monitored)
- Selectable feedback contact (normally opened/normally closed)
- Selectable remote shutdown (normally closed / normally open)
- 2 Overvoltage thresholds - phase to phase voltage
- 2 Undervoltage thresholds - phase to phase voltage
- 1 Over frequency threshold
- 1 Underfrequency threshold
- 1 Frequency ramp threshold (RoCoF … can be activated if required)
- 1 phase shift threshold (PShift … can be activated if required)
- Turn-on delay
- Signal relay R3 - activation (LED R3 ON) when a protective function U / f responds or in the event of a feedback contact error

10 APPENDIX (Parameters of the implemented standards in detail)

10.1 ÖVE TOR R25 NS SYNC [ID 802] Typ A/B low voltage synchr. generators

Connection Mode			Conformity Range	Possible Range
ID		Default		
.003	Connection	4-wire (LN)	4-wire (LN)	2-wire, 3-wire, 4-wire (LN), 4-wire (LN+LL)

Nominal Voltage					Conformity Range		Possible Range	
ID				Default	Min	Max	Min	Max
.005	ULN/LL nom	Unom Y	V	230.0	57.5	230.0	28.8	241.4
		Unom Δ	V	400.0	100.0	400.0	50.0	420.0

Functional Safety			Conformity Range	Possible Range
ID		Default		
.007	Errtol	Fixed to 2ch		
Remark:		2ch means: 2 channel with functional safety and 2 auxilliary contacts necessary		

Overvoltage1 Line to Neutral					Conformity Range		Possible Range	
ID				Default	Min	Max	Min	Max
.018	Ueff >	Enable function		on	on / off		on /off	
.019	Ueff > off	U_{THR} OFF	%Unom	111	100	130	100	135
.020	Ueff > on	U_{THR} ON	%Unom	108	100	108	100	135
.021	T Ueff >	Time OFF	ms	60000	50	180000	50	180000
Comment:		Ueff > on has a fixed offset of 0.5% U_{NOM} subtracted from the displayed value						
Only active for:		Connection Modes: 2-wire, 4-wire (LN), 4-wire (LN+LL)						

Undervoltage1 Line to Neutral					Conformity Range		Possible Range	
ID				Default	Min	Max	Min	Max
.023	Ueff < off	U_{THR} OFF	%Unom	80	10	100	10	100
.024	Ueff < on	U_{THR} ON	%Unom	90	86	100	10	100
.025	T Ueff <	Time OFF	ms	1000	50	180000	50	180000

Comment:	Ueff < on has a fixed offset of 0.5% UNOM added to the displayed value
Only active for:	Connection Modes: 2-wire, 4-wire (LN), 4-wire (LN+LL))

Overvoltage2 Line to Neutral					Conformity Range		Possible Range	
ID				Default	Min	Max	Min	Max
.034	Ueff>>	Enable function		on	on		on /off	
.035	Ueff>> off	UTHR OFF	%Unom	115	100	130	100	135
.036	Ueff>> on	UTHR ON	%Unom	108	100	108	100	135
.037	T Ueff>>	Time OFF	ms	100	50	180000	50	180000
Comment:		Ueff>> on has a fixed offset of 0.5% UNOM subtracted from the displayed value						
Only active for:		Connection Modes: 2-wire, 4-wire (LN), 4-wire (LN+LL)						

Undervoltage2 Line to Neutral					Conformity Range		Possible Range	
ID				Default	Min	Max	Min	Max
.038	Ueff<<	Enable function		on	on		on /off	
.039	Ueff<< off	UTHR OFF	%Unom	30	10	100	10	100
.040	Ueff<< on	UTHR ON	%Unom	90	86	100	0	100
.041	T Ueff<<	Time OFF	ms	200	50	180000	50	180000
Comment:		Ueff<< on has a fixed offset of 0.5% UNOM added to the displayed value						
Only active for:		Connection Modes: 2-wire, 4-wire (LN), 4-wire (LN+LL)						

10 minutes average overvoltage					Conformity Range		Possible Range	
ID				Default	Min	Max	Min	Max
.042	U10min	Enable function		off	on / off		on /off	
.043	U10min off	UTHR OFF	%Unom	111	100	130	100	135
		UTHR ON	%Unom	Fixed Hysteresis (0.9% UNOM)				
		Time OFF	ms	Fixed to fastest possible disconnection				

Overfrequency1					Conformity Range		Possible Range	
ID				Default	Min	Max	Min	Max
.055	f > off	fTHR OFF	Hz	51.50	50.00	55.00	50.00	55.00

.056	f > on	f_{THR} ON	Hz	50.10	50.00	50.10	50.00	55.00
.057	T f >	Time OFF	ms	50	50	50	50	180000
Comment:		f > on has a fixed offset of 0.01 Hz subtracted to the displayed value						
Only active for:		Voltage > 60% U_{NOM}						

Underfrequency1					Conformity Range		Possible Range	
ID				Default	Min	Max	Min	Max
.059	f < off	f_{THR} OFF	Hz	47.50	45.00	50.00	45.00	50.00
.060	f < on	f_{THR} ON	Hz	47.50	47.50	50.00	45.00	50.00
.061	T f <	Time OFF	ms	50	50	50	50	180000
Comment:		f < on has a fixed offset of 0.01 Hz added to the displayed value						
Only active for:		Voltage > 60% U_{NOM}						

Frequency measuring in general					Conformity Range		Possible Range	
ID				Default	Min	Max	Min	Max
.113	F wnd	Window length	ms	Fixed window length 100ms				

Auxiliary Contact type				Conformity Range		Possible Range	
ID			Default	Min	Max	Min	Max
.099	Contact	Type	n.c. (normally closed)	n.o. (normally opened) n.c. (normally closed)		n.o. (normally opened) n.c. (normally closed) dis. (disabled)	
.100	T Contact	Time OFF	ms	Fixed to 500ms			
.114	I3 STOP	Type	n.o. (normally opened)	n.o. (normally opened) n.c. (normally closed) dis. (disabled)		n.o. (normally opened) n.c. (normally closed) dis. (disabled)	

Turn-on delay			Conformity Range		Possible Range	
ID		Default	Min	Max	Min	Max

.102	Ton delay	Turn on time	s	60	0	300	0	900

Password					
ID			Default	Min	Max
.106	PW1	1st digit of Password	0	0	9
.107	PW2	2nd digit of Password	0	0	9
.108	PW3	3rd digit of Password	0	0	9
.109	PW4	4th digit of Password	0	0	9
Remark:		If all 4 digits of the Password are 0 (default setting) the Password request is skipped			

Errorlogic signalled (shown) on output relay R3. On = it is possible to detect this error Off = it is not possible to show this error on relay R3	
Overvoltage LL (UΔ)	on
Undervoltage LL (UΔ)	on
Overvoltage LN (UY)	on
Undervoltage LN (UY)	on
10-min overvoltage (Ū)	on
Overfrequency (f)	on
Underfrequency (f)	on
RoCoF (Rate of Change of Frequency) (Δf)	on
Phase shift (ΔΦ)	on

Remote shutdown / self-test (R) (T)	on
Contactor feedback contact reports closed, although it should be open (C) (C)	on
Contactor feedback contact reports open, although it should be closed (no error, only info) (c) (c)	on

Device Information		
ID		
.105	ID: xxxxxxxxxx	xxxxxxxxxx = Device ID
	SW: aa.dd.ccb	dd: Software version of Display Software
		aa: Software version of Measuring Software
		cc: Index of Configuration set
		b: Version of Configuration set

10.2 ÖVE TOR R25 NS ASYNC [ID 803] Typ A/B low voltage asynchr. generators

Connection Mode			Conformity Range	Possible Range
ID		Default		
.003	Connection	4-wire (LN)	4-wire (LN)	2-wire, 3-wire, 4-wire (LN), 4-wire (LN+LL)

Nominal Voltage					Conformity Range		Possible Range	
ID				Default	Min	Max	Min	Max
.005	ULN/LL nom	Unom Y	V	230.0	57.5	230.0	28.8	241.4
		Unom Δ	V	400.0	100.0	400.0	50.0	420.0

Functional Safety			Conformity Range	Possible Range
ID		Default		
.007	Errtol	Fixed to 2ch		
Remark:		2ch means: 2 channel with functional safety and 2 auxilliary contacts necessary		

Overvoltage1 Line to Neutral	Conformity Range	Possible Range

ID				Default	Min	Max	Min	Max
.018	Ueff >	Enable function		on	on / off		on /off	
.019	Ueff > off	U_{THR} OFF	%Unom	111	100	130	100	135
.020	Ueff > on	U_{THR} ON	%Unom	108	100	108	100	135
.021	T Ueff >	Time OFF	ms	60000	50	180000	50	180000
Comment:		Ueff > on has a fixed offset of 0.5% U_{NOM} subtracted from the displayed value						
Only active for:		Connection Modes: 2-wire, 4-wire (LN), 4-wire (LN+LL)						

Undervoltage1 Line to Neutral					Conformity Range		Possible Range	
ID				Default	Min	Max	Min	Max
.023	Ueff < off	U_{THR} OFF	%Unom	80	10	100	10	100
.024	Ueff < on	U_{THR} ON	%Unom	90	86	100	10	100
.025	T Ueff <	Time OFF	ms	1500	50	180000	50	180000
Comment:		Ueff < on has a fixed offset of 0.5% U_{NOM} added to the displayed value						
Only active for:		Connection Modes: 2-wire, 4-wire (LN), 4-wire (LN+LL))						

Overvoltage2 Line to Neutral					Conformity Range		Possible Range	
ID				Default	Min	Max	Min	Max
.034	Ueff>>	Enable function		on	on		on /off	
.035	Ueff>> off	U_{THR} OFF	%Unom	115	100	130	100	135
.036	Ueff>> on	U_{THR} ON	%Unom	108	100	108	100	135
.037	T Ueff>>	Time OFF	ms	100	50	180000	50	180000
Comment:		Ueff>> on has a fixed offset of 0.5% U_{NOM} subtracted from the displayed value						
Only active for:		Connection Modes: 2-wire, 4-wire (LN), 4-wire (LN+LL)						

Undervoltage2 Line to Neutral					Conformity Range		Possible Range	
ID				Default	Min	Max	Min	Max
.038	Ueff<<	Enable function		on	on		on /off	
.039	Ueff<< off	U_{THR} OFF	%Unom	25	10	100	10	100
.040	Ueff<< on	U_{THR} ON	%Unom	90	86	100	0	100
.041	T Ueff<<	Time OFF	ms	500	50	180000	50	180000

Comment:	Ueff<< on has a fixed offset of 0.5% UNOM added to the displayed value
Only active for:	Connection Modes: 2-wire, 4-wire (LN), 4-wire (LN+LL)

10 minutes average overvoltage					Conformity Range		Possible Range	
ID				Default	Min	Max	Min	Max
.042	U10min	Enable function		off	on / off		on /off	
.043	U10min off	UTHR OFF	%Unom	111	100	130	100	135
		UTHR ON	%Unom	Fixed Hysteresis (0.9% UNOM)				
		Time OFF	ms	Fixed to fastest possible disconnection				

Overfrequency1					Conformity Range		Possible Range	
ID				Default	Min	Max	Min	Max
.055	f > off	fTHR OFF	Hz	51.50	50.00	55.00	50.00	55.00
.056	f > on	fTHR ON	Hz	50.10	50.00	50.10	50.00	55.00
.057	T f >	Time OFF	ms	50	50	50	50	180000
Comment:		f > on has a fixed offset of 0.01 Hz subtracted to the displayed value						
Only active for:		Voltage > 60% UNOM						

Underfrequency1					Conformity Range		Possible Range	
ID				Default	Min	Max	Min	Max
.059	f < off	fTHR OFF	Hz	47.50	45.00	50.00	45.00	50.00
.060	f < on	fTHR ON	Hz	47.50	47.50	50.00	45.00	50.00
.061	T f <	Time OFF	ms	50	50	50	50	180000
Comment:		f < on has a fixed offset of 0.01 Hz added to the displayed value						
Only active for:		Voltage > 60% UNOM						

Frequency measuring in general					Conformity Range		Possible Range	
ID				Default	Min	Max	Min	Max
.113	F wnd	Window length	ms	Fixed window length 100ms				

Auxiliary Contact type	Conformity Range	Possible Range

ID			Default	Min	Max	Min	Max
.099	Contact	Type	n.c. (normally closed)	n.o. (normally opened) n.c. (normally closed)		n.o. (normally opened) n.c. (normally closed) dis. (disabled)	
.100	T Contact	Time OFF	ms	Fixed to 500ms			
.114	I3 STOP	Type	n.o. (normally opened)	n.o. (normally opened) n.c. (normally closed) dis. (disabled)		n.o. (normally opened) n.c. (normally closed) dis. (disabled)	

Turn-on delay					Conformity Range		Possible Range	
ID				Default	Min	Max	Min	Max
.102	Ton delay	Turn on time	s	60	0	300	0	900

Password					
ID			Default	Min	Max
.106	PW1	1st digit of Password	0	0	9
.107	PW2	2nd digit of Password	0	0	9
.108	PW3	3rd digit of Password	0	0	9
.109	PW4	4th digit of Password	0	0	9
Remark:		If all 4 digits of the Password are 0 (default setting) the Password request is skipped			

Errorlogic signalled (shown) on output relay R3. On = it is possible to detect this error Off = it is not possible to show this error on relay R3	
Overvoltage LL (UΔ)	on
Undervoltage LL (UΔ)	on
Overvoltage LN (UY)	on
Undervoltage LN (UY)	on
10-min overvoltage (Ū)	on
Overfrequency (f)	on
Underfrequency (f)	on
RoCoF (Rate of Change of Frequency) (Δf)	on
Phase shift (ΔΦ)	on
Remote shutdown / self-test (R)	on
Contactor feedback contact reports closed, although it should be open (C)	on
Contactor feedback contact reports open, although it should be closed (no error, only info) (c)	on

Device Information		
ID		
.105	ID: xxxxxxxxxx SW: aa.dd.ccb	xxxxxxxxxx = Device ID dd: Software version of Display Software aa: Software version of Measuring Software cc: Index of Configuration set b: Version of Configuration set

10.3 ÖVE TOR R25 MS SYNC [ID 852] Typ A/B medium voltage synchr. generators

Connection Mode			Conformity Range	Possible Range
ID		Default		
.003	Connection	3-wire	3-wire	2-wire, 3-wire, 4-wire (LN), 4-wire (LN+LL)

Nominal Voltage					Conformity Range		Possible Range	
ID				Default	Min	Max	Min	Max
.005	ULN/LL nom	Unom Y	V	60.4	57.5	230.0	28.8	241.4
		Unom Δ	V	105.0	100.0	400.0	50.0	420.0
Comment:		Default for Uc=21kV and 200:1 voltage transformer or Uc=31,7kV and 300:1						

Functional Safety			Conformity Range	Possible Range
ID		Default		
.007	Errtol	Fixed to 2ch		
Remark:		2ch means: 2 channel with functional safety and 2 auxilliary contacts necessary		

Overvoltage1 Line to Line					Conformity Range		Possible Range	
ID				Default	Min	Max	Min	Max
.011	U > off	U_{THR} OFF	%Unom	106	100	130	100	135
.012	U > on	U_{THR} ON	%Unom	104	100	108	100	135
.013	T U >	Time OFF	ms	60000	50	180000	50	180000
Comment:		U > on has a fixed offset of 0.5% U_{NOM} subtracted from the displayed value						
Only active for:		Connection Modes: 3-wire, 4-wire (LN+LL)						

Undervoltage1 Line to Line					Conformity Range		Possible Range	
ID				Default	Min	Max	Min	Max
.015	U < off	U_{THR} OFF	%Unom	70	10	100	10	100
.016	U < on	U_{THR} ON	%Unom	90	86	100	10	100
.017	T U <	Time OFF	ms	1500	50	180000	50	180000
Comment:		U < on has a fixed offset of 0.5% U_{NOM} added to the displayed value						

Only active for:	Connection Modes: 3-wire, 4-wire (LN+LL)

Overvoltage2 Line to Line					Conformity Range		Possible Range	
ID				Default	Min	Max	Min	Max
.026	U >>	Enable function		on	on		on /off	
.027	U >> off	U_{THR} OFF	%Unom	110	100	130	100	135
.028	U >> on	U_{THR} ON	%Unom	104	100	108	100	135
.029	T U >>	Time OFF	ms	100	50	180000	50	180000
Comment:	U >> on has a fixed offset of 0.5% U_{NOM} subtracted from the displayed value							
Only active for:	Connection Modes: 3-wire, 4-wire (LN+LL)							

Undervoltage2 Line to Line					Conformity Range		Possible Range	
ID				Default	Min	Max	Min	Max
.030	U <<	Enable function		on	on		on /off	
.031	U << off	U_{THR} OFF	%Unom	30	10	100	10	100
.032	U << on	U_{THR} ON	%Unom	90	86	100	0	100
.033	T U <<	Time OFF	ms	700	50	180000	50	180000
Comment:	U << on has a fixed offset of 0.5% U_{NOM} added to the displayed value							
Only active for:	Connection Modes: 3-wire, 4-wire (LN+LL)							

Overfrequency1					Conformity Range		Possible Range	
ID				Default	Min	Max	Min	Max
.055	f > off	f_{THR} OFF	Hz	51.50	50.00	55.00	50.00	55.00
.056	f > on	f_{THR} ON	Hz	50.10	50.00	50.10	50.00	55.00
.057	T f >	Time OFF	ms	50	50	50	50	180000
Comment:	f > on has a fixed offset of 0.01 Hz subtracted to the displayed value							
Only active for:	Voltage > 60% U_{NOM}							

Underfrequency1					Conformity Range		Possible Range	
ID				Default	Min	Max	Min	Max
.059	f < off	f_{THR} OFF	Hz	47.50	45.00	50.00	45.00	50.00

.060	f < on	f_{THR} ON	Hz	47.50	47.50	50.00	45.00	50.00
.061	T f <	Time OFF	ms	50	50	50	50	180000
Comment:		f < on has a fixed offset of 0.01 Hz added to the displayed value						
Only active for:		Voltage > 60% U_{NOM}						

Frequency measuring in general					Conformity Range		Possible Range	
ID				Default	Min	Max	Min	Max
.113	F wnd	Window length	ms	Fixed window length 100ms				

Auxiliary Contact type				Conformity Range		Possible Range	
ID			Default	Min	Max	Min	Max
.099	Contact	Type	n.c. (normally closed)	n.o. (normally opened) n.c. (normally closed)		n.o. (normally opened) n.c. (normally closed) dis. (disabled)	
.100	T Contact	Time OFF	ms	Fixed to 500ms			
.114	I3 STOP	Type	n.o. (normally opened)	n.o. (normally opened) n.c. (normally closed) dis. (disabled)		n.o. (normally opened) n.c. (normally closed) dis. (disabled)	

Turn-on delay					Conformity Range		Possible Range	
ID				Default	Min	Max	Min	Max
.102	Ton delay	Turn on time	s	60	0	300	0	900

Password					
ID			Default	Min	Max
.106	PW1	1st digit of Password	0	0	9
.107	PW2	2nd digit of Password	0	0	9
.108	PW3	3rd digit of Password	0	0	9
.109	PW4	4th digit of Password	0	0	9

Remark:	If all 4 digits of the Password are 0 (default setting) the Password request is skipped

Errorlogic signalled (shown) on output relay R3. On = it is possible to detect this error Off = it is not possible to show this error on relay R3	
Overvoltage LL (UΔ)	on
Undervoltage LL (UΔ)	on
Overvoltage LN (UY)	on
Undervoltage LN (UY)	on
10-min overvoltage ($\bar{U}$)	on
Overfrequency (f)	on
Underfrequency (f)	on
RoCoF (Rate of Change of Frequency) (Δf)	on
Phase shift (ΔΦ)	on
Remote shutdown / self-test (R)	on
Contactor feedback contact reports closed, although it should be open (C)	on
Contactor feedback contact reports open, although it should be closed (no error, only info) (c)	on

Device Information		
ID		
.105	ID: xxxxxxxxxx SW: aa.dd.ccb	xxxxxxxxxx = Device ID dd: Software version of Display Software aa: Software version of Measuring Software cc: Index of Configuration set b: Version of Configuration set

10.4 ÖVE TOR R25 MS ASYNC [ID 853] Typ A/B medium voltage asynchr. generators

Connection Mode			Conformity Range	Possible Range
ID		Default		
.003	Connection	3-wire	3-wire	2-wire, 3-wire, 4-wire (LN), 4-wire (LN+LL)

Nominal Voltage					Conformity Range		Possible Range	
ID				Default	Min	Max	Min	Max
.005	ULN/LL nom	Unom Y	V	60.4	57.5	230.0	28.8	241.4
		Unom Δ	V	105.0	100.0	400.0	50.0	420.0
Comment:	Default for Uc=21kV and 200:1 voltage transformer or Uc=31,7kV and 300:1							

Functional Safety			Conformity Range	Possible Range
ID		Default		
.007	Errtol	Fixed to 2ch		
Remark:	2ch means: 2 channel with functional safety and 2 auxilliary contacts necessary			

Overvoltage1 Line to Line					Conformity Range		Possible Range	
ID				Default	Min	Max	Min	Max
.011	U > off	U_{THR} OFF	%Unom	106	100	130	100	135
.012	U > on	U_{THR} ON	%Unom	104	100	108	100	135
.013	T U >	Time OFF	ms	60000	50	180000	50	180000
Comment:	U > on has a fixed offset of 0.5% U_{NOM} subtracted from the displayed value							
Only active for:	Connection Modes: 3-wire, 4-wire (LN+LL)							

Undervoltage1 Line to Line					Conformity Range		Possible Range	
ID				Default	Min	Max	Min	Max
.015	U < off	U_{THR} OFF	%Unom	80	10	100	10	100
.016	U < on	U_{THR} ON	%Unom	90	86	100	10	100
.017	T U <	Time OFF	ms	1500	50	180000	50	180000
Comment:	U < on has a fixed offset of 0.5% U_{NOM} added to the displayed value							

Only active for:	Connection Modes: 3-wire, 4-wire (LN+LL)

Overvoltage2 Line to Line					Conformity Range		Possible Range	
ID				Default	Min	Max	Min	Max
.026	U >>	Enable function		on	on		on /off	
.027	U >> off	U_{THR} OFF	%Unom	110	100	130	100	135
.028	U >> on	U_{THR} ON	%Unom	104	100	108	100	135
.029	T U >>	Time OFF	ms	100	50	180000	50	180000
Comment:	U >> on has a fixed offset of 0.5% U_{NOM} subtracted from the displayed value							
Only active for:	Connection Modes: 3-wire, 4-wire (LN+LL)							

Undervoltage2 Line to Line					Conformity Range		Possible Range	
ID				Default	Min	Max	Min	Max
.030	U <<	Enable function		on	on		on /off	
.031	U << off	U_{THR} OFF	%Unom	30	10	100	10	100
.032	U << on	U_{THR} ON	%Unom	90	86	100	0	100
.033	T U <<	Time OFF	ms	700	50	180000	50	180000
Comment:	U << on has a fixed offset of 0.5% U_{NOM} added to the displayed value							
Only active for:	Connection Modes: 3-wire, 4-wire (LN+LL)							

Overfrequency1					Conformity Range		Possible Range	
ID				Default	Min	Max	Min	Max
.055	f > off	f_{THR} OFF	Hz	51.50	50.00	55.00	50.00	55.00
.056	f > on	f_{THR} ON	Hz	50.10	50.00	50.10	50.00	55.00
.057	T f >	Time OFF	ms	50	50	50	50	180000
Comment:	f > on has a fixed offset of 0.01 Hz subtracted to the displayed value							
Only active for:	Voltage > 60% U_{NOM}							

Underfrequency1					Conformity Range		Possible Range	
ID				Default	Min	Max	Min	Max
.059	f < off	f_{THR} OFF	Hz	47.50	45.00	50.00	45.00	50.00

.060	f < on	f_{THR} ON	Hz	47.50	47.50	50.00	45.00	50.00
.061	T f <	Time OFF	ms	50	50	50	50	180000
Comment:		f < on has a fixed offset of 0.01 Hz added to the displayed value						
Only active for:		Voltage > 60% U_{NOM}						

Frequency measuring in general					Conformity Range		Possible Range	
ID				Default	Min	Max	Min	Max
.113	F wnd	Window length	ms	Fixed window length 100ms				

Auxiliary Contact type				Conformity Range		Possible Range	
ID			Default	Min	Max	Min	Max
.099	Contact	Type	n.c. (normally closed)	n.o. (normally opened) n.c. (normally closed)		n.o. (normally opened) n.c. (normally closed) dis. (disabled)	
.100	T Contact	Time OFF	ms	Fixed to 500ms			
.114	I3 STOP	Type	n.o. (normally opened)	n.o. (normally opened) n.c. (normally closed) dis. (disabled)		n.o. (normally opened) n.c. (normally closed) dis. (disabled)	

Turn-on delay					Conformity Range		Possible Range	
ID				Default	Min	Max	Min	Max
.102	Ton delay	Turn on time	s	60	0	300	0	900

Password					
ID			Default	Min	Max
.106	PW1	1st digit of Password	0	0	9
.107	PW2	2nd digit of Password	0	0	9
.108	PW3	3rd digit of Password	0	0	9
.109	PW4	4th digit of Password	0	0	9

Remark:	If all 4 digits of the Password are 0 (default setting) the Password request is skipped

Errorlogic signalled (shown) on output relay R3. On = it is possible to detect this error Off = it is not possible to show this error on relay R3	
Overvoltage LL (UΔ)	on
Undervoltage LL (UΔ)	on
Overvoltage LN (UY)	on
Undervoltage LN (UY)	on
10-min overvoltage ($\bar{U}$)	on
Overfrequency (f)	on
Underfrequency (f)	on
RoCoF (Rate of Change of Frequency) (Δf)	on
Phase shift (ΔΦ)	on
Remote shutdown / self-test (R)	on
Contactor feedback contact reports closed, although it should be open (C)	on
Contactor feedback contact reports open, although it should be closed (no error, only info) (c)	on

Device Information		
ID		
.105	ID: xxxxxxxxxx SW: aa.dd.ccb	xxxxxxxxxx = Device ID dd: Software version of Display Software aa: Software version of Measuring Software cc: Index of Configuration set b: Version of Configuration set

10.5 Oberösterreich OOE TOR R25 NS SYNC [ID 822] Typ A/B low voltage synchr. generators

Connection Mode			Conformity Range	Possible Range
ID		Default		
.003	Connection	4-wire (LN)	4-wire (LN)	2-wire, 3-wire, 4-wire (LN), 4-wire (LN+LL)

Nominal Voltage					Conformity Range		Possible Range	
ID				Default	Min	Max	Min	Max
.005	ULN/LL nom	Unom Y	V	230.0	57.5	230.0	28.8	241.4
		Unom Δ	V	400.0	100.0	400.0	50.0	420.0

Functional Safety			Conformity Range	Possible Range
ID		Default		
.007	Errtol	Fixed to 2ch		
Remark:		2ch means: 2 channel with functional safety and 2 auxilliary contacts necessary		

Undervoltage1 Line to Neutral					Conformity Range		Possible Range	
ID				Default	Min	Max	Min	Max
.023	Ueff < off	UTHR OFF	%Unom	80	10	100	10	100
.024	Ueff < on	UTHR ON	%Unom	85	85	100	10	100
.025	T Ueff <	Time OFF	ms	200	50	180000	50	180000
Comment:		Ueff < on has a fixed offset of 0.5% UNOM added to the displayed value						
Only active for:		Connection Modes: 2-wire, 4-wire (LN), 4-wire (LN+LL))						

Overvoltage2 Line to Neutral					Conformity Range		Possible Range	
ID				Default	Min	Max	Min	Max
.034	Ueff>>	Enable function		on	on		on /off	
.035	Ueff>> off	UTHR OFF	%Unom	115	100	130	100	135
.036	Ueff>> on	UTHR ON	%Unom	109	100	109	100	135
.037	T Ueff>>	Time OFF	ms	100	50	180000	50	180000
Comment:		Ueff>> on has a fixed offset of 0.5% UNOM subtracted from the displayed value						

Only active for:	Connection Modes: 2-wire, 4-wire (LN), 4-wire (LN+LL)

Undervoltage2 Line to Neutral					Conformity Range		Possible Range	
ID				Default	Min	Max	Min	Max
.038	Ueff<<	Enable function		on	on		on /off	
.039	Ueff<< off	UTHR OFF	%Unom	30	10	100	10	100
.040	Ueff<< on	UTHR ON	%Unom	85	85	100	0	100
.041	T Ueff<<	Time OFF	ms	200	50	180000	50	180000
Comment:		Ueff<< on has a fixed offset of 0.5% UNOM added to the displayed value						
Only active for:		Connection Modes: 2-wire, 4-wire (LN), 4-wire (LN+LL)						

10 minutes average overvoltage					Conformity Range		Possible Range	
ID				Default	Min	Max	Min	Max
.042	U10min	Enable function		on	on / off		on /off	
.043	U10min off	UTHR OFF	%Unom	111	100	130	100	135
		UTHR ON	%Unom	Fixed Hysteresis (0.9% UNOM)				
		Time OFF	ms	Fixed to fastest possible disconnection				

Overfrequency1					Conformity Range		Possible Range	
ID				Default	Min	Max	Min	Max
.055	f > off	fTHR OFF	Hz	51.50	50.00	55.00	50.00	55.00
.056	f > on	fTHR ON	Hz	50.10	50.00	50.10	50.00	55.00
.057	T f >	Time OFF	ms	50	50	50	50	180000
Comment:		f > on has a fixed offset of 0.01 Hz subtracted to the displayed value						
Only active for:		Voltage > 60% UNOM						

Underfrequency1					Conformity Range		Possible Range	
ID				Default	Min	Max	Min	Max
.059	f < off	fTHR OFF	Hz	47.50	45.00	50.00	45.00	50.00
.060	f < on	fTHR ON	Hz	47.50	47.50	50.00	45.00	50.00
.061	T f <	Time OFF	ms	50	50	50	50	180000

Comment:	f < on has a fixed offset of 0.01 Hz added to the displayed value
Only active for:	Voltage > 60% U_{NOM}

Frequency measuring in general					Conformity Range		Possible Range	
ID				Default	Min	Max	Min	Max
.113	F wnd	Window length	ms	Fixed window length 100ms				

Auxiliary Contact type					Conformity Range		Possible Range	
ID				Default	Min	Max	Min	Max
.099	Contact	Type		n.c. (normally closed)	n.o. (normally opened) n.c. (normally closed)		n.o. (normally opened) n.c. (normally closed) dis. (disabled)	
.100	T Contact	Time OFF	ms	Fixed to 500ms				
.114	I3 STOP	Type		n.o. (normally opened)	n.o. (normally opened) n.c. (normally closed) dis. (disabled)		n.o. (normally opened) n.c. (normally closed) dis. (disabled)	

Turn-on delay					Conformity Range		Possible Range	
ID				Default	Min	Max	Min	Max
.102	Ton delay	Turn on time	s	60	0	300	0	900

Password					
ID			Default	Min	Max
.106	PW1	1st digit of Password	0	0	9
.107	PW2	2nd digit of Password	0	0	9
.108	PW3	3rd digit of Password	0	0	9
.109	PW4	4th digit of Password	0	0	9
Remark:		If all 4 digits of the Password are 0 (default setting) the Password request is skipped			

Errorlogic signalled (shown) on output relay R3. On = it is possible to detect this error Off = it is not possible to show this error on relay R3	
Overvoltage LL (UΔ)	on
Undervoltage LL (UΔ)	on
Overvoltage LN (UY)	on
Undervoltage LN (UY)	on
10-min overvoltage (Ū)	on
Overfrequency (f)	on
Underfrequency (f)	on
RoCoF (Rate of Change of Frequency) (Δf)	on
Phase shift (ΔΦ)	on
Remote shutdown / self-test (R)	on
Contactor feedback contact reports closed, although it should be open (C)	on
Contactor feedback contact reports open, although it should be closed (no error, only info) (c)	on

Device Information		
ID		
.105	ID: xxxxxxxxxx	xxxxxxxxxx = Device ID
	SW: aa.dd.ccb	dd: Software version of Display Software aa: Software version of Measuring Software cc: Index of Configuration set b: Version of Configuration set

10.6 Oberösterreich OOE TOR R25 NS ASYNC [ID 823] Typ A/B low voltage asynchr. generators

Connection Mode			Conformity Range	Possible Range
ID		Default		
.003	Connection	4-wire (LN)	4-wire (LN)	2-wire, 3-wire, 4-wire (LN), 4-wire (LN+LL)

Nominal Voltage					Conformity Range		Possible Range	
ID				Default	Min	Max	Min	Max
.005	ULN/LL nom	Unom Y	V	230.0	57.5	230.0	28.8	241.4
		Unom Δ	V	400.0	100.0	400.0	50.0	420.0

Functional Safety			Conformity Range	Possible Range
ID		Default		
.007	Errtol	Fixed to 2ch		
Remark:		2ch means: 2 channel with functional safety and 2 auxilliary contacts necessary		

Undervoltage1 Line to Neutral					Conformity Range		Possible Range	
ID				Default	Min	Max	Min	Max
.023	Ueff < off	U_{THR} OFF	%Unom	80	10	100	10	100
.024	Ueff < on	U_{THR} ON	%Unom	85	85	100	10	100
.025	T Ueff <	Time OFF	ms	1500	50	180000	50	180000
Comment:		Ueff < on has a fixed offset of 0.5% U_{NOM} added to the displayed value						
Only active for:		Connection Modes: 2-wire, 4-wire (LN), 4-wire (LN+LL))						

Overvoltage2 Line to Neutral					Conformity Range		Possible Range	
ID				Default	Min	Max	Min	Max
.034	Ueff>>	Enable function		on	on		on /off	
.035	Ueff>> off	U_{THR} OFF	%Unom	115	100	130	100	135
.036	Ueff>> on	U_{THR} ON	%Unom	109	100	109	100	135
.037	T Ueff>>	Time OFF	ms	100	50	180000	50	180000
Comment:		Ueff>> on has a fixed offset of 0.5% U_{NOM} subtracted from the displayed value						

Only active for:	Connection Modes: 2-wire, 4-wire (LN), 4-wire (LN+LL)

Undervoltage2 Line to Neutral					Conformity Range		Possible Range	
ID				Default	Min	Max	Min	Max
.038	Ueff<<	Enable function		on	on		on /off	
.039	Ueff<< off	UTHR OFF	%Unom	25	10	100	10	100
.040	Ueff<< on	UTHR ON	%Unom	85	85	100	0	100
.041	T Ueff<<	Time OFF	ms	500	50	180000	50	180000
Comment:		Ueff<< on has a fixed offset of 0.5% UNOM added to the displayed value						
Only active for:		Connection Modes: 2-wire, 4-wire (LN), 4-wire (LN+LL)						

10 minutes average overvoltage					Conformity Range		Possible Range	
ID				Default	Min	Max	Min	Max
.042	U10min	Enable function		on	on / off		on /off	
.043	U10min off	UTHR OFF	%Unom	111	100	130	100	135
		UTHR ON	%Unom	Fixed Hysteresis (0.9% UNOM)				
		Time OFF	ms	Fixed to fastest possible disconnection				

Overfrequency1					Conformity Range		Possible Range	
ID				Default	Min	Max	Min	Max
.055	f > off	fTHR OFF	Hz	51.50	50.00	55.00	50.00	55.00
.056	f > on	fTHR ON	Hz	50.10	50.00	50.10	50.00	55.00
.057	T f >	Time OFF	ms	50	50	50	50	180000
Comment:		f > on has a fixed offset of 0.01 Hz subtracted to the displayed value						
Only active for:		Voltage > 60% UNOM						

Underfrequency1					Conformity Range		Possible Range	
ID				Default	Min	Max	Min	Max
.059	f < off	fTHR OFF	Hz	47.50	45.00	50.00	45.00	50.00
.060	f < on	fTHR ON	Hz	47.50	47.50	50.00	45.00	50.00
.061	T f <	Time OFF	ms	50	50	50	50	180000

Comment:	f < on has a fixed offset of 0.01 Hz added to the displayed value
Only active for:	Voltage > 60% U_{NOM}

Frequency measuring in general					Conformity Range		Possible Range	
ID				Default	Min	Max	Min	Max
.113	F wnd	Window length	ms	Fixed window length 100ms				

Auxiliary Contact type				Conformity Range		Possible Range	
ID			Default	Min	Max	Min	Max
.099	Contact	Type	n.c. (normally closed)	n.o. (normally opened) n.c. (normally closed)		n.o. (normally opened) n.c. (normally closed) dis. (disabled)	
.100	T Contact	Time OFF	ms	Fixed to 500ms			
.114	I3 STOP	Type	n.o. (normally opened)	n.o. (normally opened) n.c. (normally closed) dis. (disabled)		n.o. (normally opened) n.c. (normally closed) dis. (disabled)	

Turn-on delay					Conformity Range		Possible Range	
ID				Default	Min	Max	Min	Max
.102	Ton delay	Turn on time	s	60	0	300	0	900

Password					
ID			Default	Min	Max
.106	PW1	1st digit of Password	0	0	9
.107	PW2	2nd digit of Password	0	0	9
.108	PW3	3rd digit of Password	0	0	9
.109	PW4	4th digit of Password	0	0	9
Remark:		If all 4 digits of the Password are 0 (default setting) the Password request is skipped			

Errorlogic signalled (shown) on output relay R3. On = it is possible to detect this error Off = it is not possible to show this error on relay R3	
Overvoltage LL (UΔ)	on
Undervoltage LL (UΔ)	on
Overvoltage LN (UY)	on
Undervoltage LN (UY)	on
10-min overvoltage (Ū)	on
Overfrequency (f)	on
Underfrequency (f)	on
RoCoF (Rate of Change of Frequency) (Δf)	on
Phase shift (ΔΦ)	on
Remote shutdown / self-test (R)	on
Contactor feedback contact reports closed, although it should be open (C)	on
Contactor feedback contact reports open, although it should be closed (no error, only info) (c)	on

Device Information		
ID		
.105	ID: xxxxxxxxxx	xxxxxxxxxx = Device ID
	SW: aa.dd.ccb	dd: Software version of Display Software aa: Software version of Measuring Software cc: Index of Configuration set b: Version of Configuration set

10.7 Oberösterreich OOE TOR R25 MS SYNC [ID 872] Typ A/B medium voltage synchr. generators

Connection Mode			Conformity Range	Possible Range
ID		Default		
.003	Connection	3-wire	3-wire	2-wire, 3-wire, 4-wire (LN), 4-wire (LN+LL)

Nominal Voltage					Conformity Range		Possible Range	
ID				Default	Min	Max	Min	Max
.005	ULN/LL nom	Unom Y	V	60.4	57.5	230.0	28.8	241.4
		Unom Δ	V	105.0	100.0	400.0	50.0	420.0
Comment:		Default for Uc=21kV and 200:1 voltage transformer or Uc=31,7kV and 300:1						

Functional Safety			Conformity Range	Possible Range
ID		Default		
.007	Errtol	Fixed to 2ch		
Remark:		2ch means: 2 channel with functional safety and 2 auxilliary contacts necessary		

Overvoltage1 Line to Line					Conformity Range		Possible Range	
ID				Default	Min	Max	Min	Max
.011	U > off	U_{THR} OFF	%Unom	104.5	100	130	100	135
.012	U > on	U_{THR} ON	%Unom	104.5	100	109	100	135
.013	T U >	Time OFF	ms	60000	50	180000	50	180000
Comment:		U > on has a fixed offset of 0.5% U_{NOM} subtracted from the displayed value						
Only active for:		Connection Modes: 3-wire, 4-wire (LN+LL)						

Undervoltage1 Line to Line					Conformity Range		Possible Range	
ID				Default	Min	Max	Min	Max
.015	U < off	U_{THR} OFF	%Unom	70	10	100	10	100
.016	U < on	U_{THR} ON	%Unom	85	85	100	10	100
.017	T U <	Time OFF	ms	200	50	180000	50	180000
Comment:		U < on has a fixed offset of 0.5% U_{NOM} added to the displayed value						

Only active for:	Connection Modes: 3-wire, 4-wire (LN+LL)

Overvoltage2 Line to Line					Conformity Range		Possible Range	
ID				Default	Min	Max	Min	Max
.026	U >>	Enable function		on	on		on /off	
.027	U >> off	UTHR OFF	%Unom	108	100	130	100	135
.028	U >> on	UTHR ON	%Unom	104.5	100	109	100	135
.029	T U >>	Time OFF	ms	100	50	180000	50	180000
Comment:		U >> on has a fixed offset of 0.5% UNOM subtracted from the displayed value						
Only active for:		Connection Modes: 3-wire, 4-wire (LN+LL)						

Undervoltage2 Line to Line					Conformity Range		Possible Range	
ID				Default	Min	Max	Min	Max
.030	U <<	Enable function		on	on		on /off	
.031	U << off	UTHR OFF	%Unom	30	10	100	10	100
.032	U << on	UTHR ON	%Unom	85	85	100	0	100
.033	T U <<	Time OFF	ms	200	50	180000	50	180000
Comment:		U << on has a fixed offset of 0.5% UNOM added to the displayed value						
Only active for:		Connection Modes: 3-wire, 4-wire (LN+LL)						

10 minutes average overvoltage					Conformity Range		Possible Range	
ID				Default	Min	Max	Min	Max
.042	U10min	Enable function		off	on / off		on /off	
.043	U10min off	UTHR OFF	%Unom	104.5	100	130	100	135
		UTHR ON	%Unom	Fixed Hysteresis (0.9% UNOM)				
		Time OFF	ms	Fixed to fastest possible disconnection				

Overfrequency1					Conformity Range		Possible Range	
ID				Default	Min	Max	Min	Max
.055	f > off	fTHR OFF	Hz	51.50	50.00	55.00	50.00	55.00
.056	f > on	fTHR ON	Hz	50.10	50.00	50.10	50.00	55.00

.057	T f >	Time OFF	ms	50	50	50	50	180000
Comment:		f > on has a fixed offset of 0.01 Hz subtracted to the displayed value						
Only active for:		Voltage > 60% U_{NOM}						

Underfrequency1					Conformity Range		Possible Range	
ID				Default	Min	Max	Min	Max
.059	f < off	f_{THR} OFF	Hz	47.50	45.00	50.00	45.00	50.00
.060	f < on	f_{THR} ON	Hz	47.50	47.50	50.00	45.00	50.00
.061	T f <	Time OFF	ms	50	50	50	50	180000
Comment:		f < on has a fixed offset of 0.01 Hz added to the displayed value						
Only active for:		Voltage > 60% U_{NOM}						

Frequency measuring in general					Conformity Range		Possible Range	
ID				Default	Min	Max	Min	Max
.113	F wnd	Window length	ms	Fixed window length 100ms				

Auxiliary Contact type				Conformity Range		Possible Range	
ID			Default	Min	Max	Min	Max
.099	Contact	Type	n.c. (normally closed)	n.o. (normally opened) n.c. (normally closed)		n.o. (normally opened) n.c. (normally closed) dis. (disabled)	
.100	T Contact	Time OFF	ms	Fixed to 500ms			
.114	I3 STOP	Type	n.o. (normally opened)	n.o. (normally opened) n.c. (normally closed) dis. (disabled)		n.o. (normally opened) n.c. (normally closed) dis. (disabled)	

Turn-on delay					Conformity Range		Possible Range	
ID				Default	Min	Max	Min	Max
.102	Ton delay	Turn on time	s	60	0	300	0	900

Password					
ID			Default	Min	Max
.106	PW1	1st digit of Password	0	0	9
.107	PW2	2nd digit of Password	0	0	9
.108	PW3	3rd digit of Password	0	0	9
.109	PW4	4th digit of Password	0	0	9
Remark:		If all 4 digits of the Password are 0 (default setting) the Password request is skipped			

Errorlogic signalled (shown) on output relay R3. On = it is possible to detect this error Off = it is not possible to show this error on relay R3	
Overvoltage LL (UΔ)	on
Undervoltage LL (UΔ)	on
Overvoltage LN (UY)	on
Undervoltage LN (UY)	on
10-min overvoltage (Ū)	on
Overfrequency (f)	on
Underfrequency (f)	on
RoCoF (Rate of Change of Frequency) (Δf)	on
Phase shift (ΔΦ)	on
Remote shutdown / self-test (R)	on
Contactor feedback contact reports closed, although it should be open (C)	on
Contactor feedback contact reports open, although it should be closed (no error, only info) (c)	on

Device Information		
ID		
.105	ID: xxxxxxxxxx SW: aa.dd.ccb	xxxxxxxxxx = Device ID dd: Software version of Display Software aa: Software version of Measuring Software cc: Index of Configuration set b: Version of Configuration set

10.8 Oberösterreich OOE TOR R25 MS ASYNC [ID 873] Typ A/B med. voltage asynchr. generators

Connection Mode			Conformity Range	Possible Range
ID		Default		
.003	Connection	3-wire	3-wire	2-wire, 3-wire, 4-wire (LN), 4-wire (LN+LL)

Nominal Voltage					Conformity Range		Possible Range	
ID				Default	Min	Max	Min	Max
.005	ULN/LL nom	Unom Y	V	60.4	57.5	230.0	28.8	241.4
		Unom Δ	V	105.0	100.0	400.0	50.0	420.0
Comment:		Default for Uc=21kV and 200:1 voltage transformer or Uc=31,7kV and 300:1						

Functional Safety			Conformity Range	Possible Range
ID		Default		
.007	Errtol	Fixed to 2ch		
Remark:		2ch means: 2 channel with functional safety and 2 auxilliary contacts necessary		

Overvoltage1 Line to Line					Conformity Range		Possible Range	
ID				Default	Min	Max	Min	Max
.011	U > off	U_{THR} OFF	%Unom	104.5	100	130	100	135
.012	U > on	U_{THR} ON	%Unom	104.5	100	109	100	135
.013	T U >	Time OFF	ms	60000	50	180000	50	180000
Comment:		U > on has a fixed offset of 0.5% U_{NOM} subtracted from the displayed value						
Only active for:		Connection Modes: 3-wire, 4-wire (LN+LL)						

Undervoltage1 Line to Line					Conformity Range		Possible Range	
ID				Default	Min	Max	Min	Max
.015	U < off	U_{THR} OFF	%Unom	80	10	100	10	100
.016	U < on	U_{THR} ON	%Unom	85	85	100	10	100
.017	T U <	Time OFF	ms	1000	50	180000	50	180000
Comment:		U < on has a fixed offset of 0.5% U_{NOM} added to the displayed value						

Only active for:	Connection Modes: 3-wire, 4-wire (LN+LL)

Overvoltage2 Line to Line					Conformity Range		Possible Range	
ID				Default	Min	Max	Min	Max
.026	U >>	Enable function		on	on		on /off	
.027	U >> off	UTHR OFF	%Unom	108	100	130	100	135
.028	U >> on	UTHR ON	%Unom	104.5	100	109	100	135
.029	T U >>	Time OFF	ms	100	50	180000	50	180000
Comment:		U >> on has a fixed offset of 0.5% UNOM subtracted from the displayed value						
Only active for:		Connection Modes: 3-wire, 4-wire (LN+LL)						

Undervoltage2 Line to Line					Conformity Range		Possible Range	
ID				Default	Min	Max	Min	Max
.030	U <<	Enable function		on	on		on /off	
.031	U << off	UTHR OFF	%Unom	30	10	100	10	100
.032	U << on	UTHR ON	%Unom	85	85	100	0	100
.033	T U <<	Time OFF	ms	500	50	180000	50	180000
Comment:		U << on has a fixed offset of 0.5% UNOM added to the displayed value						
Only active for:		Connection Modes: 3-wire, 4-wire (LN+LL)						

10 minutes average overvoltage					Conformity Range		Possible Range	
ID				Default	Min	Max	Min	Max
.042	U10min	Enable function		off	on / off		on /off	
.043	U10min off	UTHR OFF	%Unom	104.5	100	130	100	135
		UTHR ON	%Unom	Fixed Hysteresis (0.9% UNOM)				
		Time OFF	ms	Fixed to fastest possible disconnection				

Overfrequency1					Conformity Range		Possible Range	
ID				Default	Min	Max	Min	Max
.055	f > off	fTHR OFF	Hz	51.50	50.00	55.00	50.00	55.00
.056	f > on	fTHR ON	Hz	50.10	50.00	50.10	50.00	55.00

.057	T f >	Time OFF	ms	50	50	50	50	180000
Comment:		f > on has a fixed offset of 0.01 Hz subtracted to the displayed value						
Only active for:		Voltage > 60% U_{NOM}						

Underfrequency1					Conformity Range		Possible Range	
ID				Default	Min	Max	Min	Max
.059	f < off	f_{THR} OFF	Hz	47.50	45.00	50.00	45.00	50.00
.060	f < on	f_{THR} ON	Hz	47.50	47.50	50.00	45.00	50.00
.061	T f <	Time OFF	ms	50	50	50	50	180000
Comment:		f < on has a fixed offset of 0.01 Hz added to the displayed value						
Only active for:		Voltage > 60% U_{NOM}						

Frequency measuring in general					Conformity Range		Possible Range	
ID				Default	Min	Max	Min	Max
.113	F wnd	Window length	ms	Fixed window length 100ms				

Auxiliary Contact type				Conformity Range		Possible Range	
ID			Default	Min	Max	Min	Max
.099	Contact	Type	n.c. (normally closed)	n.o. (normally opened) n.c. (normally closed)		n.o. (normally opened) n.c. (normally closed) dis. (disabled)	
.100	T Contact	Time OFF	ms	Fixed to 500ms			
.114	I3 STOP	Type	n.o. (normally opened)	n.o. (normally opened) n.c. (normally closed) dis. (disabled)		n.o. (normally opened) n.c. (normally closed) dis. (disabled)	

Turn-on delay					Conformity Range		Possible Range	
ID				Default	Min	Max	Min	Max
.102	Ton delay	Turn on time	s	60	0	300	0	900

Password					
ID			Default	Min	Max
.106	PW1	1st digit of Password	0	0	9
.107	PW2	2nd digit of Password	0	0	9
.108	PW3	3rd digit of Password	0	0	9
.109	PW4	4th digit of Password	0	0	9
Remark:		If all 4 digits of the Password are 0 (default setting) the Password request is skipped			

Errorlogic signalled (shown) on output relay R3. On = it is possible to detect this error Off = it is not possible to show this error on relay R3	
Overvoltage LL (UΔ)	on
Undervoltage LL (UΔ)	on
Overvoltage LN (UY)	on
Undervoltage LN (UY)	on
10-min overvoltage ($\bar{U}$)	on
Overfrequency (f)	on
Underfrequency (f)	on
RoCoF (Rate of Change of Frequency) (Δf)	on
Phase shift (ΔΦ)	on
Remote shutdown / self-test (R)	on
Contactor feedback contact reports closed, although it should be open (C)	on
Contactor feedback contact reports open, although it should be closed (no error, only info) (c)	on

Device Information		
ID		
.105	ID: xxxxxxxxxx SW: aa.dd.ccb	xxxxxxxxxx = Device ID dd: Software version of Display Software aa: Software version of Measuring Software cc: Index of Configuration set b: Version of Configuration set

10.9 Wien TOR R25 NS SYNC [ID 832] Typ A/B low voltage synchr. generators

Connection Mode			Conformity Range	Possible Range
ID		Default		
.003	Connection	4-wire (LN)	4-wire (LN)	2-wire, 3-wire, 4-wire (LN), 4-wire (LN+LL)

Nominal Voltage					Conformity Range		Possible Range	
ID				Default	Min	Max	Min	Max
.005	ULN/LL nom	Unom Y	V	230.0	57.5	230.0	28.8	241.4
		Unom Δ	V	400.0	100.0	400.0	50.0	420.0

Functional Safety			Conformity Range	Possible Range
ID		Default		
.007	Errtol	Fixed to 2ch		
Remark:		2ch means: 2 channel with functional safety and 2 auxilliary contacts necessary		

Overvoltage1 Line to Neutral					Conformity Range		Possible Range	
ID				Default	Min	Max	Min	Max
.018	Ueff >	Enable function		on	on / off		on /off	
.019	Ueff > off	U_{THR} OFF	%Unom	108	100	130	100	135
.020	Ueff > on	U_{THR} ON	%Unom	107	100	108	100	135
.021	T Ueff >	Time OFF	ms	60000	50	180000	50	180000
Comment:		Ueff > on has a fixed offset of 0.5% U_{NOM} subtracted from the displayed value						
Only active for:		Connection Modes: 2-wire, 4-wire (LN), 4-wire (LN+LL)						

Undervoltage1 Line to Neutral					Conformity Range		Possible Range	
ID				Default	Min	Max	Min	Max
.023	Ueff < off	U_{THR} OFF	%Unom	80	10	100	10	100
.024	Ueff < on	U_{THR} ON	%Unom	90	86	100	10	100
.025	T Ueff <	Time OFF	ms	1000	50	180000	50	180000
Comment:		Ueff < on has a fixed offset of 0.5% U_{NOM} added to the displayed value						

Only active for:	Connection Modes: 2-wire, 4-wire (LN), 4-wire (LN+LL))

Overvoltage2 Line to Neutral					Conformity Range		Possible Range	
ID				Default	Min	Max	Min	Max
.034	Ueff>>	Enable function		on	on		on /off	
.035	Ueff>> off	UTHR OFF	%Unom	115	100	130	100	135
.036	Ueff>> on	UTHR ON	%Unom	107	100	108	100	135
.037	T Ueff>>	Time OFF	ms	100	50	180000	50	180000
Comment:		Ueff>> on has a fixed offset of 0.5% UNOM subtracted from the displayed value						
Only active for:		Connection Modes: 2-wire, 4-wire (LN), 4-wire (LN+LL)						

Undervoltage2 Line to Neutral					Conformity Range		Possible Range	
ID				Default	Min	Max	Min	Max
.038	Ueff<<	Enable function		on	on		on /off	
.039	Ueff<< off	UTHR OFF	%Unom	30	10	100	10	100
.040	Ueff<< on	UTHR ON	%Unom	90	86	100	0	100
.041	T Ueff<<	Time OFF	ms	200	50	180000	50	180000
Comment:		Ueff<< on has a fixed offset of 0.5% UNOM added to the displayed value						
Only active for:		Connection Modes: 2-wire, 4-wire (LN), 4-wire (LN+LL)						

10 minutes average overvoltage					Conformity Range		Possible Range	
ID				Default	Min	Max	Min	Max
.042	U10min	Enable function		off	on / off		on /off	
.043	U10min off	UTHR OFF	%Unom	108	100	130	100	135
		UTHR ON	%Unom	Fixed Hysteresis (0.9% UNOM)				
		Time OFF	ms	Fixed to fastest possible disconnection				

Overfrequency1					Conformity Range		Possible Range	
ID				Default	Min	Max	Min	Max
.055	f > off	fTHR OFF	Hz	51.50	50.00	55.00	50.00	55.00
.056	f > on	fTHR ON	Hz	50.10	50.00	50.10	50.00	55.00

.057	T f >	Time OFF	ms	50	50	50	50	180000
Comment:		f > on has a fixed offset of 0.01 Hz subtracted to the displayed value						
Only active for:		Voltage > 60% U_{NOM}						

Underfrequency1					Conformity Range		Possible Range	
ID				Default	Min	Max	Min	Max
.059	f < off	f_{THR} OFF	Hz	47.50	45.00	50.00	45.00	50.00
.060	f < on	f_{THR} ON	Hz	47.50	47.50	50.00	45.00	50.00
.061	T f <	Time OFF	ms	50	50	50	50	180000
Comment:		f < on has a fixed offset of 0.01 Hz added to the displayed value						
Only active for:		Voltage > 60% U_{NOM}						

Frequency measuring in general					Conformity Range		Possible Range	
ID				Default	Min	Max	Min	Max
.113	F wnd	Window length	ms	Fixed window length 100ms				

Auxiliary Contact type				Conformity Range		Possible Range	
ID			Default	Min	Max	Min	Max
.099	Contact	Type	n.c. (normally closed)	n.o. (normally opened) n.c. (normally closed)		n.o. (normally opened) n.c. (normally closed) dis. (disabled)	
.100	T Contact	Time OFF	ms	Fixed to 500ms			
.114	I3 STOP	Type	n.o. (normally opened)	n.o. (normally opened) n.c. (normally closed) dis. (disabled)		n.o. (normally opened) n.c. (normally closed) dis. (disabled)	

Turn-on delay					Conformity Range		Possible Range	
ID				Default	Min	Max	Min	Max
.102	Ton delay	Turn on time	s	60	0	300	0	900

Password					
ID			Default	Min	Max
.106	PW1	1st digit of Password	0	0	9
.107	PW2	2nd digit of Password	0	0	9
.108	PW3	3rd digit of Password	0	0	9
.109	PW4	4th digit of Password	0	0	9
Remark:		If all 4 digits of the Password are 0 (default setting) the Password request is skipped			

Errorlogic signalled (shown) on output relay R3. On = it is possible to detect this error Off = it is not possible to show this error on relay R3	
Overvoltage LL (UΔ)	on
Undervoltage LL (UΔ)	on
Overvoltage LN (UY)	on
Undervoltage LN (UY)	on
10-min overvoltage (Ū)	on
Overfrequency (f)	on
Underfrequency (f)	on
RoCoF (Rate of Change of Frequency) (Δf)	on
Phase shift (ΔΦ)	on
Remote shutdown / self-test (R)	on
Contactor feedback contact reports closed, although it should be open (C)	on
Contactor feedback contact reports open, although it should be closed (no error, only info) (c)	on

Device Information		
ID		
.105	ID: xxxxxxxxxx SW: aa.dd.ccb	xxxxxxxxxx = Device ID dd: Software version of Display Software aa: Software version of Measuring Software cc: Index of Configuration set b: Version of Configuration set

10.10 Wien TOR R25 NS ASYNC [ID 833] Typ A/B low voltage asynchr. generators

Connection Mode			Conformity Range	Possible Range
ID		Default		
.003	Connection	4-wire (LN)	4-wire (LN)	2-wire, 3-wire, 4-wire (LN), 4-wire (LN+LL)

Nominal Voltage					Conformity Range		Possible Range	
ID				Default	Min	Max	Min	Max
.005	ULN/LL nom	Unom Y	V	230.0	57.5	230.0	28.8	241.4
		Unom Δ	V	400.0	100.0	400.0	50.0	420.0

Functional Safety			Conformity Range	Possible Range
ID		Default		
.007	Errtol	Fixed to 2ch		
Remark:		2ch means: 2 channel with functional safety and 2 auxilliary contacts necessary		

Overvoltage1 Line to Neutral					Conformity Range		Possible Range	
ID				Default	Min	Max	Min	Max
.018	Ueff >	Enable function		on	on / off		on /off	
.019	Ueff > off	U_{THR} OFF	%Unom	108	100	130	100	135
.020	Ueff > on	U_{THR} ON	%Unom	107	100	108	100	135
.021	T Ueff >	Time OFF	ms	60000	50	180000	50	180000
Comment:		Ueff > on has a fixed offset of 0.5% U_{NOM} subtracted from the displayed value						
Only active for:		Connection Modes: 2-wire, 4-wire (LN), 4-wire (LN+LL)						

Undervoltage1 Line to Neutral					Conformity Range		Possible Range	
ID				Default	Min	Max	Min	Max
.023	Ueff < off	U_{THR} OFF	%Unom	80	10	100	10	100
.024	Ueff < on	U_{THR} ON	%Unom	90	86	100	10	100
.025	T Ueff <	Time OFF	ms	1000	50	180000	50	180000
Comment:		Ueff < on has a fixed offset of 0.5% U_{NOM} added to the displayed value						

Only active for:	Connection Modes: 2-wire, 4-wire (LN), 4-wire (LN+LL))

Overvoltage2 Line to Neutral					Conformity Range		Possible Range	
ID				Default	Min	Max	Min	Max
.034	Ueff>>	Enable function		on	on		on /off	
.035	Ueff>> off	U_{THR} OFF	%Unom	115	100	130	100	135
.036	Ueff>> on	U_{THR} ON	%Unom	107	100	108	100	135
.037	T Ueff>>	Time OFF	ms	100	50	180000	50	180000
Comment:	Ueff>> on has a fixed offset of 0.5% U_{NOM} subtracted from the displayed value							
Only active for:	Connection Modes: 2-wire, 4-wire (LN), 4-wire (LN+LL)							

Undervoltage2 Line to Neutral					Conformity Range		Possible Range	
ID				Default	Min	Max	Min	Max
.038	Ueff<<	Enable function		on	on		on /off	
.039	Ueff<< off	U_{THR} OFF	%Unom	30	10	100	10	100
.040	Ueff<< on	U_{THR} ON	%Unom	90	86	100	0	100
.041	T Ueff<<	Time OFF	ms	200	50	180000	50	180000
Comment:	Ueff<< on has a fixed offset of 0.5% U_{NOM} added to the displayed value							
Only active for:	Connection Modes: 2-wire, 4-wire (LN), 4-wire (LN+LL)							

10 minutes average overvoltage					Conformity Range		Possible Range	
ID				Default	Min	Max	Min	Max
.042	U10min	Enable function		off	on / off		on /off	
.043	U10min off	U_{THR} OFF	%Unom	108	100	130	100	135
		U_{THR} ON	%Unom	Fixed Hysteresis (0.9% U_{NOM})				
		Time OFF	ms	Fixed to fastest possible disconnection				

Overfrequency1					Conformity Range		Possible Range	
ID				Default	Min	Max	Min	Max
.055	f > off	f_{THR} OFF	Hz	51.50	50.00	55.00	50.00	55.00
.056	f > on	f_{THR} ON	Hz	50.10	50.00	50.10	50.00	55.00

.057	T f >	Time OFF	ms	50	50	50	50	180000
Comment:		f > on has a fixed offset of 0.01 Hz subtracted to the displayed value						
Only active for:		Voltage > 60% U_{NOM}						

Underfrequency1					Conformity Range		Possible Range	
ID				Default	Min	Max	Min	Max
.059	f < off	f_{THR} OFF	Hz	47.50	45.00	50.00	45.00	50.00
.060	f < on	f_{THR} ON	Hz	47.50	47.50	50.00	45.00	50.00
.061	T f <	Time OFF	ms	50	50	50	50	180000
Comment:		f < on has a fixed offset of 0.01 Hz added to the displayed value						
Only active for:		Voltage > 60% U_{NOM}						

Frequency measuring in general					Conformity Range		Possible Range	
ID				Default	Min	Max	Min	Max
.113	F wnd	Window length	ms	Fixed window length 100ms				

Auxiliary Contact type				Conformity Range		Possible Range	
ID			Default	Min	Max	Min	Max
.099	Contact	Type	n.c. (normally closed)	n.o. (normally opened) n.c. (normally closed)		n.o. (normally opened) n.c. (normally closed) dis. (disabled)	
.100	T Contact	Time OFF	ms	Fixed to 500ms			
.114	I3 STOP	Type	n.o. (normally opened)	n.o. (normally opened) n.c. (normally closed) dis. (disabled)		n.o. (normally opened) n.c. (normally closed) dis. (disabled)	

Turn-on delay					Conformity Range		Possible Range	
ID				Default	Min	Max	Min	Max
.102	Ton delay	Turn on time	s	60	0	300	0	900

Password					
ID			Default	Min	Max
.106	PW1	1st digit of Password	0	0	9
.107	PW2	2nd digit of Password	0	0	9
.108	PW3	3rd digit of Password	0	0	9
.109	PW4	4th digit of Password	0	0	9
Remark:		If all 4 digits of the Password are 0 (default setting) the Password request is skipped			

Errorlogic signalled (shown) on output relay R3. On = it is possible to detect this error Off = it is not possible to show this error on relay R3	
Overvoltage LL (UΔ)	on
Undervoltage LL (UΔ)	on
Overvoltage LN (UY)	on
Undervoltage LN (UY)	on
10-min overvoltage (Ū)	on
Overfrequency (f)	on
Underfrequency (f)	on
RoCoF (Rate of Change of Frequency) (Δf)	on
Phase shift (ΔΦ)	on
Remote shutdown / self-test (R)	on
Contactor feedback contact reports closed, although it should be open (C)	on
Contactor feedback contact reports open, although it should be closed (no error, only info) (c)	on

Device Information		
ID		
.105	ID: xxxxxxxxxx SW: aa.dd.ccb	xxxxxxxxxx = Device ID dd: Software version of Display Software aa: Software version of Measuring Software cc: Index of Configuration set b: Version of Configuration set

10.11 Wien TOR R25 MS SYNC [ID 882] Typ A/B medium voltage synchr. generators

Connection Mode			Conformity Range	Possible Range
ID		Default		
.003	Connection	3-wire	3-wire	2-wire, 3-wire, 4-wire (LN), 4-wire (LN+LL)

Nominal Voltage					Conformity Range		Possible Range	
ID				Default	Min	Max	Min	Max
.005	ULN/LL nom	Unom Y Unom Δ	V V	58.7 102.0	57.5 100.0	230.0 400.0	28.8 50.0	241.4 420.0
Comment:		Default for Uc=21kV and 200:1 voltage transformer or Uc=31,7kV and 300:1						

Functional Safety			Conformity Range	Possible Range
ID		Default		
.007	Errtol	Fixed to 2ch		
Remark:		2ch means: 2 channel with functional safety and 2 auxilliary contacts necessary		

Overvoltage1 Line to Line					Conformity Range		Possible Range	
ID				Default	Min	Max	Min	Max
.011	U > off	U_{THR} OFF	%Unom	108	100	130	100	135
.012	U > on	U_{THR} ON	%Unom	107	100	108	100	135
.013	T U >	Time OFF	ms	60000	50	180000	50	180000
Comment:		U > on has a fixed offset of 0.5% U_{NOM} subtracted from the displayed value						
Only active for:		Connection Modes: 3-wire, 4-wire (LN+LL)						

Undervoltage1 Line to Line					Conformity Range		Possible Range	
ID				Default	Min	Max	Min	Max
.015	U < off	U_{THR} OFF	%Unom	80	10	100	10	100
.016	U < on	U_{THR} ON	%Unom	90	86	100	10	100
.017	T U <	Time OFF	ms	1000	50	180000	50	180000
Comment:		U < on has a fixed offset of 0.5% U_{NOM} added to the displayed value						

Only active for:	Connection Modes: 3-wire, 4-wire (LN+LL)

Overvoltage2 Line to Line					Conformity Range		Possible Range	
ID				Default	Min	Max	Min	Max
.026	U >>	Enable function		on	on		on /off	
.027	U >> off	U_{THR} OFF	%Unom	115	100	130	100	135
.028	U >> on	U_{THR} ON	%Unom	107	100	108	100	135
.029	T U >>	Time OFF	ms	100	50	180000	50	180000
Comment:	U >> on has a fixed offset of 0.5% U_{NOM} subtracted from the displayed value							
Only active for:	Connection Modes: 3-wire, 4-wire (LN+LL)							

Undervoltage2 Line to Line					Conformity Range		Possible Range	
ID				Default	Min	Max	Min	Max
.030	U <<	Enable function		on	on		on /off	
.031	U << off	U_{THR} OFF	%Unom	30	10	100	10	100
.032	U << on	U_{THR} ON	%Unom	90	86	100	0	100
.033	T U <<	Time OFF	ms	200	50	180000	50	180000
Comment:	U << on has a fixed offset of 0.5% U_{NOM} added to the displayed value							
Only active for:	Connection Modes: 3-wire, 4-wire (LN+LL)							

Overfrequency1					Conformity Range		Possible Range	
ID				Default	Min	Max	Min	Max
.055	f > off	f_{THR} OFF	Hz	51.50	50.00	55.00	50.00	55.00
.056	f > on	f_{THR} ON	Hz	50.10	50.00	50.10	50.00	55.00
.057	T f >	Time OFF	ms	50	50	50	50	180000
Comment:	f > on has a fixed offset of 0.01 Hz subtracted to the displayed value							
Only active for:	Voltage > 60% U_{NOM}							

Underfrequency1					Conformity Range		Possible Range	
ID				Default	Min	Max	Min	Max
.059	f < off	f_{THR} OFF	Hz	47.50	45.00	50.00	45.00	50.00

.060	f < on	f_{THR} ON	Hz	47.50	47.50	50.00	45.00	50.00
.061	T f <	Time OFF	ms	50	50	50	50	180000
Comment:		f < on has a fixed offset of 0.01 Hz added to the displayed value						
Only active for:		Voltage > 60% U_{NOM}						

Frequency measuring in general					Conformity Range		Possible Range	
ID				Default	Min	Max	Min	Max
.113	F wnd	Window length	ms	Fixed window length 100ms				

Auxiliary Contact type					Conformity Range		Possible Range	
ID			Default		Min	Max	Min	Max
.099	Contact	Type	n.c. (normally closed)		n.o. (normally opened) n.c. (normally closed)		n.o. (normally opened) n.c. (normally closed) dis. (disabled)	
.100	T Contact	Time OFF	ms	Fixed to 500ms				
.114	I3 STOP	Type	n.o. (normally opened)		n.o. (normally opened) n.c. (normally closed) dis. (disabled)		n.o. (normally opened) n.c. (normally closed) dis. (disabled)	

Turn-on delay					Conformity Range		Possible Range	
ID				Default	Min	Max	Min	Max
.102	Ton delay	Turn on time	s	60	0	300	0	900

Password					
ID			Default	Min	Max
.106	PW1	1st digit of Password	0	0	9
.107	PW2	2nd digit of Password	0	0	9
.108	PW3	3rd digit of Password	0	0	9
.109	PW4	4th digit of Password	0	0	9

Remark:	If all 4 digits of the Password are 0 (default setting) the Password request is skipped

Errorlogic signalled (shown) on output relay R3. On = it is possible to detect this error Off = it is not possible to show this error on relay R3	
Overvoltage LL (UΔ)	on
Undervoltage LL (UΔ)	on
Overvoltage LN (UY)	on
Undervoltage LN (UY)	on
10-min overvoltage ($\bar{U}$)	on
Overfrequency (f)	on
Underfrequency (f)	on
RoCoF (Rate of Change of Frequency) (Δf)	on
Phase shift (ΔΦ)	on
Remote shutdown / self-test (R)	on
Contactor feedback contact reports closed, although it should be open (C)	on
Contactor feedback contact reports open, although it should be closed (no error, only info) (c)	on

Device Information		
ID		
.105	ID: xxxxxxxxxx SW: aa.dd.ccb	xxxxxxxxxx = Device ID dd: Software version of Display Software aa: Software version of Measuring Software cc: Index of Configuration set b: Version of Configuration set

10.12 Wien TOR R25 MS ASYNC [ID 883] Typ A/B medium voltage asynchr. generators

Connection Mode			Conformity Range	Possible Range
ID		Default		
.003	Connection	3-wire	3-wire	2-wire, 3-wire, 4-wire (LN), 4-wire (LN+LL)

Nominal Voltage					Conformity Range		Possible Range	
ID				Default	Min	Max	Min	Max
.005	ULN/LL nom	Unom Y	V	58.7	57.5	230.0	28.8	241.4
		Unom Δ	V	102.0	100.0	400.0	50.0	420.0
Comment:		Default for Uc=21kV and 200:1 voltage transformer or Uc=31,7kV and 300:1						

Functional Safety			Conformity Range	Possible Range
ID		Default		
.007	Errtol	Fixed to 2ch		
Remark:		2ch means: 2 channel with functional safety and 2 auxilliary contacts necessary		

Overvoltage1 Line to Line					Conformity Range		Possible Range	
ID				Default	Min	Max	Min	Max
.011	U > off	U_{THR} OFF	%Unom	108	100	130	100	135
.012	U > on	U_{THR} ON	%Unom	107	100	108	100	135
.013	T U >	Time OFF	ms	60000	50	180000	50	180000
Comment:		U > on has a fixed offset of 0.5% U_{NOM} subtracted from the displayed value						
Only active for:		Connection Modes: 3-wire, 4-wire (LN+LL)						

Undervoltage1 Line to Line					Conformity Range		Possible Range	
ID				Default	Min	Max	Min	Max
.015	U < off	U_{THR} OFF	%Unom	80	10	100	10	100
.016	U < on	U_{THR} ON	%Unom	90	86	100	10	100
.017	T U <	Time OFF	ms	1000	50	180000	50	180000
Comment:		U < on has a fixed offset of 0.5% U_{NOM} added to the displayed value						

Only active for:	Connection Modes: 3-wire, 4-wire (LN+LL)

Overvoltage2 Line to Line					Conformity Range		Possible Range	
ID				Default	Min	Max	Min	Max
.026	U >>	Enable function		on	on		on /off	
.027	U >> off	U_{THR} OFF	%Unom	115	100	130	100	135
.028	U >> on	U_{THR} ON	%Unom	107	100	108	100	135
.029	T U >>	Time OFF	ms	100	50	180000	50	180000
Comment:		U >> on has a fixed offset of 0.5% U_{NOM} subtracted from the displayed value						
Only active for:		Connection Modes: 3-wire, 4-wire (LN+LL)						

Undervoltage2 Line to Line					Conformity Range		Possible Range	
ID				Default	Min	Max	Min	Max
.030	U <<	Enable function		on	on		on /off	
.031	U << off	U_{THR} OFF	%Unom	30	10	100	10	100
.032	U << on	U_{THR} ON	%Unom	90	86	100	0	100
.033	T U <<	Time OFF	ms	200	50	180000	50	180000
Comment:		U << on has a fixed offset of 0.5% U_{NOM} added to the displayed value						
Only active for:		Connection Modes: 3-wire, 4-wire (LN+LL)						

Overfrequency1					Conformity Range		Possible Range	
ID				Default	Min	Max	Min	Max
.055	f > off	f_{THR} OFF	Hz	51.50	50.00	55.00	50.00	55.00
.056	f > on	f_{THR} ON	Hz	50.10	50.00	50.10	50.00	55.00
.057	T f >	Time OFF	ms	50	50	50	50	180000
Comment:		f > on has a fixed offset of 0.01 Hz subtracted to the displayed value						
Only active for:		Voltage > 60% U_{NOM}						

Underfrequency1					Conformity Range		Possible Range	
ID				Default	Min	Max	Min	Max
.059	f < off	f_{THR} OFF	Hz	47.50	45.00	50.00	45.00	50.00

.060	f < on	f_{THR} ON	Hz	47.50	47.50	50.00	45.00	50.00
.061	T f <	Time OFF	ms	50	50	50	50	180000
Comment:		f < on has a fixed offset of 0.01 Hz added to the displayed value						
Only active for:		Voltage > 60% U_{NOM}						

Frequency measuring in general					Conformity Range		Possible Range	
ID				Default	Min	Max	Min	Max
.113	F wnd	Window length	ms	Fixed window length 100ms				

Auxiliary Contact type					Conformity Range		Possible Range	
ID				Default	Min	Max	Min	Max
.099	Contact	Type		n.c. (normally closed)	n.o. (normally opened) n.c. (normally closed)		n.o. (normally opened) n.c. (normally closed) dis. (disabled)	
.100	T Contact	Time OFF	ms	Fixed to 500ms				
.114	I3 STOP	Type		n.o. (normally opened)	n.o. (normally opened) n.c. (normally closed) dis. (disabled)		n.o. (normally opened) n.c. (normally closed) dis. (disabled)	

Turn-on delay					Conformity Range		Possible Range	
ID				Default	Min	Max	Min	Max
.102	Ton delay	Turn on time	s	60	0	300	0	900

Password					
ID			Default	Min	Max
.106	PW1	1st digit of Password	0	0	9
.107	PW2	2nd digit of Password	0	0	9
.108	PW3	3rd digit of Password	0	0	9
.109	PW4	4th digit of Password	0	0	9

Remark:	If all 4 digits of the Password are 0 (default setting) the Password request is skipped

Errorlogic signalled (shown) on output relay R3. On = it is possible to detect this error Off = it is not possible to show this error on relay R3	
Overvoltage LL (UΔ)	on
Undervoltage LL (UΔ)	on
Overvoltage LN (UY)	on
Undervoltage LN (UY)	on
10-min overvoltage (Ū)	on
Overfrequency (f)	on
Underfrequency (f)	on
RoCoF (Rate of Change of Frequency) (Δf)	on
Phase shift (ΔΦ)	on
Remote shutdown / self-test (R)	on
Contactor feedback contact reports closed, although it should be open (C)	on
Contactor feedback contact reports open, although it should be closed (no error, only info) (c)	on

Device Information		
ID		
.105	ID: xxxxxxxxxx SW: aa.dd.ccb	xxxxxxxxxx = Device ID dd: Software version of Display Software aa: Software version of Measuring Software cc: Index of Configuration set b: Version of Configuration set

10.13 TIROL TOR NS SYNC [ID 812] Typ A/B low voltage synchr. generators

Connection Mode			Conformity Range	Possible Range
ID		Default		
.003	Connection	4-wire (LN)	4-wire (LN)	2-wire, 3-wire, 4-wire (LN), 4-wire (LN+LL)

Nominal Voltage					Conformity Range		Possible Range	
ID				Default	Min	Max	Min	Max
.005	ULN/LL nom	Unom Y	V	230.0	57.5	230.0	28.8	241.4
		Unom Δ	V	400.0	100.0	400.0	50.0	420.0

Functional Safety			Conformity Range	Possible Range
ID		Default		
.007	Errtol	Fixed to 2ch		
Remark:		2ch means: 2 channel with functional safety and 2 auxilliary contacts necessary		

Overvoltage1 Line to Neutral					Conformity Range		Possible Range	
ID				Default	Min	Max	Min	Max
.018	Ueff >	Enable function		on	on / off		on /off	
.019	Ueff > off	U_{THR} OFF	%Unom	111	100	130	100	135
.020	Ueff > on	U_{THR} ON	%Unom	109	100	109	100	135
.021	T Ueff >	Time OFF	ms	60000	50	180000	50	180000
Comment:		Ueff > on has a fixed offset of 0.5% U_{NOM} subtracted from the displayed value						
Only active for:		Connection Modes: 2-wire, 4-wire (LN), 4-wire (LN+LL)						

Undervoltage1 Line to Neutral					Conformity Range		Possible Range	
ID				Default	Min	Max	Min	Max
.023	Ueff < off	U_{THR} OFF	%Unom	80	10	100	10	100
.024	Ueff < on	U_{THR} ON	%Unom	86	86	100	10	100
.025	T Ueff <	Time OFF	ms	1000	50	180000	50	180000
Comment:		Ueff < on has a fixed offset of 0.5% U_{NOM} added to the displayed value						

Only active for:	Connection Modes: 2-wire, 4-wire (LN), 4-wire (LN+LL))

Overvoltage2 Line to Neutral					Conformity Range		Possible Range	
ID				Default	Min	Max	Min	Max
.034	Ueff>>	Enable function		on	on		on /off	
.035	Ueff>> off	U_{THR} OFF	%Unom	115	100	130	100	135
.036	Ueff>> on	U_{THR} ON	%Unom	109	100	109	100	135
.037	T Ueff>>	Time OFF	ms	100	50	180000	50	180000
Comment:		Ueff>> on has a fixed offset of 0.5% U_{NOM} subtracted from the displayed value						
Only active for:		Connection Modes: 2-wire, 4-wire (LN), 4-wire (LN+LL)						

Undervoltage2 Line to Neutral					Conformity Range		Possible Range	
ID				Default	Min	Max	Min	Max
.038	Ueff<<	Enable function		on	on		on /off	
.039	Ueff<< off	U_{THR} OFF	%Unom	30	10	100	10	100
.040	Ueff<< on	U_{THR} ON	%Unom	86	86	100	0	100
.041	T Ueff<<	Time OFF	ms	200	50	180000	50	180000
Comment:		Ueff<< on has a fixed offset of 0.5% U_{NOM} added to the displayed value						
Only active for:		Connection Modes: 2-wire, 4-wire (LN), 4-wire (LN+LL)						

10 minutes average overvoltage					Conformity Range		Possible Range	
ID				Default	Min	Max	Min	Max
.042	U10min	Enable function		off	on / off		on /off	
.043	U10min off	U_{THR} OFF	%Unom	111	100	130	100	135
		U_{THR} ON	%Unom	Fixed Hysteresis (0.9% U_{NOM})				
		Time OFF	ms	Fixed to fastest possible disconnection				

Overfrequency1					Conformity Range		Possible Range	
ID				Default	Min	Max	Min	Max
.055	f > off	f_{THR} OFF	Hz	51.50	50.00	55.00	50.00	55.00
.056	f > on	f_{THR} ON	Hz	50.10	50.00	50.10	50.00	55.00

.057	T f >	Time OFF	ms	50	50	50	50	180000
Comment:		f > on has a fixed offset of 0.01 Hz subtracted to the displayed value						
Only active for:		Voltage > 60% U_{NOM}						

Underfrequency1					Conformity Range		Possible Range	
ID				Default	Min	Max	Min	Max
.059	f < off	f_{THR} OFF	Hz	47.50	45.00	50.00	45.00	50.00
.060	f < on	f_{THR} ON	Hz	47.50	47.50	50.00	45.00	50.00
.061	T f <	Time OFF	ms	50	50	50	50	180000
Comment:		f < on has a fixed offset of 0.01 Hz added to the displayed value						
Only active for:		Voltage > 60% U_{NOM}						

Frequency measuring in general					Conformity Range		Possible Range	
ID				Default	Min	Max	Min	Max
.113	F wnd	Window length	ms	Fixed window length 100ms				

Auxiliary Contact type				Conformity Range		Possible Range	
ID			Default	Min	Max	Min	Max
.099	Contact	Type	n.c. (normally closed)	n.o. (normally opened) n.c. (normally closed)		n.o. (normally opened) n.c. (normally closed) dis. (disabled)	
.100	T Contact	Time OFF	ms	Fixed to 500ms			
.114	I3 STOP	Type	n.c. (normally closed)	n.o. (normally opened) n.c. (normally closed) dis. (disabled)		n.o. (normally opened) n.c. (normally closed) dis. (disabled)	

Turn-on delay					Conformity Range		Possible Range	
ID				Default	Min	Max	Min	Max
.102	Ton delay	Turn on time	s	300	0	300	0	900

Password					
ID			Default	Min	Max
.106	PW1	1st digit of Password	0	0	9
.107	PW2	2nd digit of Password	0	0	9
.108	PW3	3rd digit of Password	0	0	9
.109	PW4	4th digit of Password	0	0	9
Remark:		If all 4 digits of the Password are 0 (default setting) the Password request is skipped			

Errorlogic signalled (shown) on output relay R3. On = it is possible to detect this error Off = it is not possible to show this error on relay R3	
Overvoltage LL (UΔ)	on
Undervoltage LL (UΔ)	on
Overvoltage LN (UY)	on
Undervoltage LN (UY)	on
10-min overvoltage (Ū)	on
Overfrequency (f)	on
Underfrequency (f)	on
RoCoF (Rate of Change of Frequency) (Δf)	on
Phase shift (ΔΦ)	on
Remote shutdown / self-test (R)	on
Contactor feedback contact reports closed, although it should be open (C)	on
Contactor feedback contact reports open, although it should be closed (no error, only info) (c)	on

Device Information		
ID		
.105	ID: xxxxxxxxxx SW: aa.dd.ccb	xxxxxxxxxx = Device ID dd: Software version of Display Software aa: Software version of Measuring Software cc: Index of Configuration set b: Version of Configuration set

10.14 TIROL TOR NS ASYNC [ID 813] Typ A/B low voltage asynchr. generators

Connection Mode			Conformity Range	Possible Range
ID		Default		
.003	Connection	4-wire (LN)	4-wire (LN)	2-wire, 3-wire, 4-wire (LN), 4-wire (LN+LL)

Nominal Voltage					Conformity Range		Possible Range	
ID				Default	Min	Max	Min	Max
.005	ULN/LL nom	Unom Y	V	230.0	57.5	230.0	28.8	241.4
		Unom Δ	V	400.0	100.0	400.0	50.0	420.0

Functional Safety			Conformity Range	Possible Range
ID		Default		
.007	Errtol	Fixed to 2ch		
Remark:		2ch means: 2 channel with functional safety and 2 auxilliary contacts necessary		

Overvoltage1 Line to Neutral					Conformity Range		Possible Range	
ID				Default	Min	Max	Min	Max
.018	Ueff >	Enable function		on	on / off		on /off	
.019	Ueff > off	U_{THR} OFF	%Unom	111	100	130	100	135
.020	Ueff > on	U_{THR} ON	%Unom	109	100	109	100	135
.021	T Ueff >	Time OFF	ms	60000	50	180000	50	180000
Comment:		Ueff > on has a fixed offset of 0.5% U_{NOM} subtracted from the displayed value						
Only active for:		Connection Modes: 2-wire, 4-wire (LN), 4-wire (LN+LL)						

Undervoltage1 Line to Neutral					Conformity Range		Possible Range	
ID				Default	Min	Max	Min	Max
.023	Ueff < off	U_{THR} OFF	%Unom	80	10	100	10	100
.024	Ueff < on	U_{THR} ON	%Unom	86	86	100	10	100
.025	T Ueff <	Time OFF	ms	1500	50	180000	50	180000
Comment:		Ueff < on has a fixed offset of 0.5% U_{NOM} added to the displayed value						

Only active for:	Connection Modes: 2-wire, 4-wire (LN), 4-wire (LN+LL))

Overvoltage2 Line to Neutral					Conformity Range		Possible Range	
ID				Default	Min	Max	Min	Max
.034	Ueff>>	Enable function		on	on		on /off	
.035	Ueff>> off	U_{THR} OFF	%Unom	115	100	130	100	135
.036	Ueff>> on	U_{THR} ON	%Unom	109	100	109	100	135
.037	T Ueff>>	Time OFF	ms	100	50	180000	50	180000
Comment:		Ueff>> on has a fixed offset of 0.5% U_{NOM} subtracted from the displayed value						
Only active for:		Connection Modes: 2-wire, 4-wire (LN), 4-wire (LN+LL)						

Undervoltage2 Line to Neutral					Conformity Range		Possible Range	
ID				Default	Min	Max	Min	Max
.038	Ueff<<	Enable function		on	on		on /off	
.039	Ueff<< off	U_{THR} OFF	%Unom	25	10	100	10	100
.040	Ueff<< on	U_{THR} ON	%Unom	86	86	100	0	100
.041	T Ueff<<	Time OFF	ms	500	50	180000	50	180000
Comment:		Ueff<< on has a fixed offset of 0.5% U_{NOM} added to the displayed value						
Only active for:		Connection Modes: 2-wire, 4-wire (LN), 4-wire (LN+LL)						

10 minutes average overvoltage					Conformity Range		Possible Range	
ID				Default	Min	Max	Min	Max
.042	U10min	Enable function		off	on / off		on /off	
.043	U10min off	U_{THR} OFF	%Unom	111	100	130	100	135
		U_{THR} ON	%Unom	Fixed Hysteresis (0.9% U_{NOM})				
		Time OFF	ms	Fixed to fastest possible disconnection				

Overfrequency1					Conformity Range		Possible Range	
ID				Default	Min	Max	Min	Max
.055	f > off	f_{THR} OFF	Hz	51.50	50.00	55.00	50.00	55.00
.056	f > on	f_{THR} ON	Hz	50.10	50.00	50.10	50.00	55.00

.057	T f >	Time OFF	ms	50	50	50	50	180000
Comment:		f > on has a fixed offset of 0.01 Hz subtracted to the displayed value						
Only active for:		Voltage > 60% U_{NOM}						

Underfrequency1					Conformity Range		Possible Range	
ID				Default	Min	Max	Min	Max
.059	f < off	f_{THR} OFF	Hz	47.50	45.00	50.00	45.00	50.00
.060	f < on	f_{THR} ON	Hz	47.50	47.50	50.00	45.00	50.00
.061	T f <	Time OFF	ms	50	50	50	50	180000
Comment:		f < on has a fixed offset of 0.01 Hz added to the displayed value						
Only active for:		Voltage > 60% U_{NOM}						

Frequency measuring in general					Conformity Range		Possible Range	
ID				Default	Min	Max	Min	Max
.113	F wnd	Window length	ms	Fixed window length 100ms				

Auxiliary Contact type				Conformity Range		Possible Range	
ID			Default	Min	Max	Min	Max
.099	Contact	Type	n.c. (normally closed)	n.o. (normally opened) n.c. (normally closed)		n.o. (normally opened) n.c. (normally closed) dis. (disabled)	
.100	T Contact	Time OFF	ms	Fixed to 500ms			
.114	I3 STOP	Type	n.c. (normally opened)	n.o. (normally opened) n.c. (normally closed) dis. (disabled)		n.o. (normally opened) n.c. (normally closed) dis. (disabled)	

Turn-on delay					Conformity Range		Possible Range	
ID				Default	Min	Max	Min	Max
.102	Ton delay	Turn on time	s	300	0	300	0	900

Password					
ID			Default	Min	Max
.106	PW1	1st digit of Password	0	0	9
.107	PW2	2nd digit of Password	0	0	9
.108	PW3	3rd digit of Password	0	0	9
.109	PW4	4th digit of Password	0	0	9
Remark:		If all 4 digits of the Password are 0 (default setting) the Password request is skipped			

Errorlogic signalled (shown) on output relay R3. On = it is possible to detect this error Off = it is not possible to show this error on relay R3	
Overvoltage LL (UΔ)	on
Undervoltage LL (UΔ)	on
Overvoltage LN (UY)	on
Undervoltage LN (UY)	on
10-min overvoltage (Ū)	on
Overfrequency (f)	on
Underfrequency (f)	on
RoCoF (Rate of Change of Frequency) (Δf)	on
Phase shift (ΔΦ)	on
Remote shutdown / self-test (R)	on
Contactor feedback contact reports closed, although it should be open (C)	on
Contactor feedback contact reports open, although it should be closed (no error, only info) (c)	on

Device Information		
ID		
.105	ID: xxxxxxxxxx SW: aa.dd.ccb	xxxxxxxxxx = Device ID dd: Software version of Display Software aa: Software version of Measuring Software cc: Index of Configuration set b: Version of Configuration set

10.15 TIROL TOR MS SYNC [ID 862] Typ A/B medium voltage synchr. generators

Connection Mode			Conformity Range	Possible Range
ID		Default		
.003	Connection	3-wire	3-wire	2-wire, 3-wire, 4-wire (LN), 4-wire (LN+LL)

Nominal Voltage					Conformity Range		Possible Range	
ID				Default	Min	Max	Min	Max
.005	ULN/LL nom	Unom Y Unom Δ	V V	57.5 100.0	57.5 100.0	230.0 400.0	28.8 50.0	241.4 420.0
Comment:		Default for Uc=21kV and 200:1 voltage transformer or Uc=31,7kV and 300:1						

Functional Safety			Conformity Range	Possible Range
ID		Default		
.007	Errtol	Fixed to 2ch		
Remark:		2ch means: 2 channel with functional safety and 2 auxilliary contacts necessary		

Overvoltage1 Line to Line					Conformity Range		Possible Range	
ID				Default	Min	Max	Min	Max
.011	U > off	U_{THR} OFF	%Unom	105	100	130	100	135
.012	U > on	U_{THR} ON	%Unom	104	100	108	100	135
.013	T U >	Time OFF	ms	60000	50	180000	50	180000
Comment:		U > on has a fixed offset of 0.5% U_{NOM} subtracted from the displayed value						
Only active for:		Connection Modes: 3-wire, 4-wire (LN+LL)						

Undervoltage1 Line to Line					Conformity Range		Possible Range	
ID				Default	Min	Max	Min	Max
.015	U < off	U_{THR} OFF	%Unom	70	10	100	10	100
.016	U < on	U_{THR} ON	%Unom	86	86	100	10	100
.017	T U <	Time OFF	ms	1000	50	180000	50	180000
Comment:		U < on has a fixed offset of 0.5% U_{NOM} added to the displayed value						

Only active for:	Connection Modes: 3-wire, 4-wire (LN+LL)

Overvoltage2 Line to Line					Conformity Range		Possible Range	
ID				Default	Min	Max	Min	Max
.026	U >>	Enable function		on	on		on /off	
.027	U >> off	U_{THR} OFF	%Unom	115	100	130	100	135
.028	U >> on	U_{THR} ON	%Unom	104	100	108	100	135
.029	T U >>	Time OFF	ms	100	50	180000	50	180000
Comment:		U >> on has a fixed offset of 0.5% U_{NOM} subtracted from the displayed value						
Only active for:		Connection Modes: 3-wire, 4-wire (LN+LL)						

Undervoltage2 Line to Line					Conformity Range		Possible Range	
ID				Default	Min	Max	Min	Max
.030	U <<	Enable function		on	on		on /off	
.031	U << off	U_{THR} OFF	%Unom	30	10	100	10	100
.032	U << on	U_{THR} ON	%Unom	86	86	100	0	100
.033	T U <<	Time OFF	ms	200	50	180000	50	180000
Comment:		U << on has a fixed offset of 0.5% U_{NOM} added to the displayed value						
Only active for:		Connection Modes: 3-wire, 4-wire (LN+LL)						

Overfrequency1					Conformity Range		Possible Range	
ID				Default	Min	Max	Min	Max
.055	f > off	f_{THR} OFF	Hz	51.50	50.00	55.00	50.00	55.00
.056	f > on	f_{THR} ON	Hz	50.10	50.00	50.10	50.00	55.00
.057	T f >	Time OFF	ms	50	50	50	50	180000
Comment:		f > on has a fixed offset of 0.01 Hz subtracted to the displayed value						
Only active for:		Voltage > 60% U_{NOM}						

Underfrequency1					Conformity Range		Possible Range	
ID				Default	Min	Max	Min	Max
.059	f < off	f_{THR} OFF	Hz	47.50	45.00	50.00	45.00	50.00

.060	f < on	f_{THR} ON	Hz	47.50	47.50	50.00	45.00	50.00
.061	T f <	Time OFF	ms	50	50	50	50	180000
Comment:		f < on has a fixed offset of 0.01 Hz added to the displayed value						
Only active for:		Voltage > 60% U_{NOM}						

Frequency measuring in general					Conformity Range		Possible Range	
ID				Default	Min	Max	Min	Max
.113	F wnd	Window length	ms	Fixed window length 100ms				

Auxiliary Contact type				Conformity Range		Possible Range	
ID			Default	Min	Max	Min	Max
.099	Contact	Type	n.c. (normally closed)	n.o. (normally opened) n.c. (normally closed)		n.o. (normally opened) n.c. (normally closed) dis. (disabled)	
.100	T Contact	Time OFF	ms	Fixed to 500ms			
.114	I3 STOP	Type	n.c. (normally opened)	n.o. (normally opened) n.c. (normally closed) dis. (disabled)		n.o. (normally opened) n.c. (normally closed) dis. (disabled)	

Turn-on delay					Conformity Range		Possible Range	
ID				Default	Min	Max	Min	Max
.102	Ton delay	Turn on time	s	300	0	300	0	900

Password					
ID			Default	Min	Max
.106	PW1	1st digit of Password	0	0	9
.107	PW2	2nd digit of Password	0	0	9
.108	PW3	3rd digit of Password	0	0	9
.109	PW4	4th digit of Password	0	0	9

Remark:	If all 4 digits of the Password are 0 (default setting) the Password request is skipped

Errorlogic signalled (shown) on output relay R3. On = it is possible to detect this error Off = it is not possible to show this error on relay R3	
Overvoltage LL (UΔ)	on
Undervoltage LL (UΔ)	on
Overvoltage LN (UY)	on
Undervoltage LN (UY)	on
10-min overvoltage ($\bar{U}$)	on
Overfrequency (f)	on
Underfrequency (f)	on
RoCoF (Rate of Change of Frequency) (Δf)	on
Phase shift (ΔΦ)	on
Remote shutdown / self-test (R)	on
Contactor feedback contact reports closed, although it should be open (C)	on
Contactor feedback contact reports open, although it should be closed (no error, only info) (c)	on

Device Information		
ID		
.105	ID: xxxxxxxxxx SW: aa.dd.ccb	xxxxxxxxxx = Device ID dd: Software version of Display Software aa: Software version of Measuring Software cc: Index of Configuration set b: Version of Configuration set

10.16 TIROL TOR MS ASYNC [ID 863] Typ A/B medium voltage asynchr. generators

Connection Mode			Conformity Range	Possible Range
ID		Default		
.003	Connection	3-wire	3-wire	2-wire, 3-wire, 4-wire (LN), 4-wire (LN+LL)

Nominal Voltage					Conformity Range		Possible Range	
ID				Default	Min	Max	Min	Max
.005	ULN/LL nom	Unom Y	V	57.5	57.5	230.0	28.8	241.4
		Unom Δ	V	100.0	100.0	400.0	50.0	420.0
Comment:		Default for Uc=21kV and 200:1 voltage transformer or Uc=31,7kV and 300:1						

Functional Safety			Conformity Range	Possible Range
ID		Default		
.007	Errtol	Fixed to 2ch		
Remark:		2ch means: 2 channel with functional safety and 2 auxilliary contacts necessary		

Overvoltage1 Line to Line					Conformity Range		Possible Range	
ID				Default	Min	Max	Min	Max
.011	U > off	U_{THR} OFF	%Unom	105	100	130	100	135
.012	U > on	U_{THR} ON	%Unom	104	100	108	100	135
.013	T U >	Time OFF	ms	60000	50	180000	50	180000
Comment:		U > on has a fixed offset of 0.5% U_{NOM} subtracted from the displayed value						
Only active for:		Connection Modes: 3-wire, 4-wire (LN+LL)						

Undervoltage1 Line to Line					Conformity Range		Possible Range	
ID				Default	Min	Max	Min	Max
.015	U < off	U_{THR} OFF	%Unom	80	10	100	10	100
.016	U < on	U_{THR} ON	%Unom	86	86	100	10	100
.017	T U <	Time OFF	ms	1500	50	180000	50	180000
Comment:		U < on has a fixed offset of 0.5% U_{NOM} added to the displayed value						

Only active for:	Connection Modes: 3-wire, 4-wire (LN+LL)

Overvoltage2 Line to Line					Conformity Range		Possible Range	
ID				Default	Min	Max	Min	Max
.026	U >>	Enable function		on	on		on /off	
.027	U >> off	UTHR OFF	%Unom	115	100	130	100	135
.028	U >> on	UTHR ON	%Unom	104	100	108	100	135
.029	T U >>	Time OFF	ms	100	50	180000	50	180000
Comment:		U >> on has a fixed offset of 0.5% UNOM subtracted from the displayed value						
Only active for:		Connection Modes: 3-wire, 4-wire (LN+LL)						

Undervoltage2 Line to Line					Conformity Range		Possible Range	
ID				Default	Min	Max	Min	Max
.030	U <<	Enable function		on	on		on /off	
.031	U << off	UTHR OFF	%Unom	30	10	100	10	100
.032	U << on	UTHR ON	%Unom	86	86	100	0	100
.033	T U <<	Time OFF	ms	500	50	180000	50	180000
Comment:		U << on has a fixed offset of 0.5% UNOM added to the displayed value						
Only active for:		Connection Modes: 3-wire, 4-wire (LN+LL)						

Overfrequency1					Conformity Range		Possible Range	
ID				Default	Min	Max	Min	Max
.055	f > off	fTHR OFF	Hz	51.50	50.00	55.00	50.00	55.00
.056	f > on	fTHR ON	Hz	50.10	50.00	50.10	50.00	55.00
.057	T f >	Time OFF	ms	50	50	50	50	180000
Comment:		f > on has a fixed offset of 0.01 Hz subtracted to the displayed value						
Only active for:		Voltage > 60% UNOM						

Underfrequency1					Conformity Range		Possible Range	
ID				Default	Min	Max	Min	Max
.059	f < off	fTHR OFF	Hz	47.50	45.00	50.00	45.00	50.00

.060	f < on	f_{THR} ON	Hz	47.50	47.50	50.00	45.00	50.00
.061	T f <	Time OFF	ms	50	50	50	50	180000
Comment:		f < on has a fixed offset of 0.01 Hz added to the displayed value						
Only active for:		Voltage > 60% U_{NOM}						

Frequency measuring in general					Conformity Range		Possible Range	
ID				Default	Min	Max	Min	Max
.113	F wnd	Window length	ms	Fixed window length 100ms				

Auxiliary Contact type				Conformity Range		Possible Range	
ID			Default	Min	Max	Min	Max
.099	Contact	Type	n.c. (normally closed)	n.o. (normally opened) n.c. (normally closed)		n.o. (normally opened) n.c. (normally closed) dis. (disabled)	
.100	T Contact	Time OFF	ms	Fixed to 500ms			
.114	I3 STOP	Type	n.c. (normally opened)	n.o. (normally opened) n.c. (normally closed) dis. (disabled)		n.o. (normally opened) n.c. (normally closed) dis. (disabled)	

Turn-on delay					Conformity Range		Possible Range	
ID				Default	Min	Max	Min	Max
.102	Ton delay	Turn on time	s	300	0	300	0	900

Password					
ID			Default	Min	Max
.106	PW1	1st digit of Password	0	0	9
.107	PW2	2nd digit of Password	0	0	9
.108	PW3	3rd digit of Password	0	0	9
.109	PW4	4th digit of Password	0	0	9

Remark:	If all 4 digits of the Password are 0 (default setting) the Password request is skipped

Errorlogic signalled (shown) on output relay R3. On = it is possible to detect this error Off = it is not possible to show this error on relay R3	
Overvoltage LL (UΔ)	on
Undervoltage LL (UΔ)	on
Overvoltage LN (UY)	on
Undervoltage LN (UY)	on
10-min overvoltage (Ū)	on
Overfrequency (f)	on
Underfrequency (f)	on
RoCoF (Rate of Change of Frequency) (Δf)	on
Phase shift (ΔΦ)	on
Remote shutdown / self-test (R)	on
Contactor feedback contact reports closed, although it should be open (C)	on
Contactor feedback contact reports open, although it should be closed (no error, only info) (c)	on

Device Information		
ID		
.105	ID: xxxxxxxxxx	xxxxxxxxxx = Device ID
	SW: aa.dd.ccb	dd: Software version of Display Software aa: Software version of Measuring Software cc: Index of Configuration set b: Version of Configuration set

10.17 BURGENLAND TOR R25 NS SYNC [ID 842] Typ A/B low voltage synchr. generators

Connection Mode			Conformity Range	Possible Range
ID		Default		
.003	Connection	4-wire LN	4-wire LN	2-wire LN - 4-wire LL+LN

Nominal Voltage				Conformity Range		Possible Range	
ID			Default	Min	Max	Min	Max
.005	ULN/LL nom	Unom Y Unom Δ	230,00V /400,00V	57,50V /100,00V	230,00V /400,00V	28,75V /50,00V	241,50V /420,00V
Comment:		Default for Uc=21kV and 200:1 voltage transformer or Uc=31,7kV and 300:1					

Functional Safety			Conformity Range	Possible Range
ID		Default		
.007	Errtol	2ch	2ch, 1ch	2ch, 1ch
Remark:		2ch means: 2 channel with functional safety and 2 auxilliary contacts necessary 1ch means: 1 channel without functional safety and 1 auxilliary contact1 necessary		

Overvoltage1 Line to Neutral					Conformity Range		Possible Range	
ID				Default	Min	Max	Min	Max
.018	Ueff >	Enable function		on	on / off		on /off	
.019	Ueff > off	U_{THR} OFF	%Unom /VUnom	111,00% (255,30V)	100,00% (230,00V)	130,00% (299,00V)	100,00% (230,00V)	135,00% (310,50V)
.020	Ueff > on	U_{THR} ON	%Unom /VUnom	108,00% (248,40V)	100,00% (230,00V)	108,00% (248,40V)	100,00% (230,00V)	135,00% (310,50V)
.021	T Ueff >	Time OFF		60000 ms	50 ms	180000 ms	50 ms	180000 ms
Only active for:		Connection Modes: 2-wire, 4-wire (LN), 4-wire (LN+LL)						

Undervoltage1 Line to Neutral	Conformity Range	Possible Range

ID				Default	Min	Max	Min	Max
.023	Ueff < off	U_{THR} OFF	%Unom /VUnom	80,00% (184,00V)	10,00% (23,00V)	100,00% (230,00V)	10,00% (23,00V)	100,00% (230,00V)
.024	Ueff < on	U_{THR} ON	%Unom /VUnom	90,00% (207,00V)	86,00% (197,80V)	100,00% (230,00V)	10,00% (23,00V)	100,00% (230,00V)
.025	T Ueff <	Time OFF		1000 ms	50 ms	180000 ms	50 ms	180000 ms
Only active for:		Connection Modes: 2-wire, 4-wire (LN), 4-wire (LN+LL))						

Overvoltage2 Line to Neutral					Conformity Range		Possible Range	
ID				Default	Min	Max	Min	Max
.034	Ueff>>	Enable function		on	on		on /off	
.035	Ueff>> off	U_{THR} OFF	%Unom /VUnom	115,00% (264,50V)	100,00% (230,00V)	130,00% (299,00V)	100,00% (230,00V)	135,00% (310,50V)
.036	Ueff>> on	U_{THR} ON	%Unom /VUnom	108,00% (248,40V)	100,00% (230,00V)	108,00% (248,40V)	100,00% (230,00V)	135,00% (310,50V)
.037	T Ueff>>	Time OFF		100 ms	50 ms	180000 ms	50 ms	180000 ms
Only active for:		Connection Modes: 2-wire, 4-wire (LN), 4-wire (LN+LL)						

Undervoltage2 Line to Neutral					Conformity Range		Possible Range	
ID				Default	Min	Max	Min	Max
.038	Ueff<<	Enable function		on	on		on /off	
.039	Ueff<< off	U_{THR} OFF	%Unom /VUnom	30,00% (69,00V)	10,00% (23,00V)	100,00% (230,00V)	10,00% (23,00V)	100,00% (230,00V)
.040	Ueff<< on	U_{THR} ON	%Unom /VUnom	90,00% (207,00V)	86,00% (197,80V)	100,00% (230,00V)	0,00% (0,00V)	100,00% (230,00V)
.041	T Ueff<<	Time OFF		200 ms	50 ms	180000 ms	50 ms	180000 ms
Only active for:		Connection Modes: 2-wire, 4-wire (LN), 4-wire (LN+LL)						

10 minutes average overvoltage					Conformity Range		Possible Range	
ID				Default	Min	Max	Min	Max
.042	U10min	Enable function		off	on / off		on /off	
.043	U10min off	U_{THR} OFF	%Unom /VUnom	111,00% (255,30V /444,00V)	100,00% (230,00V /400,00V)	130,00% (299,00V /520,00V)	100,00% (230,00V /400,00V)	135,00% (310,50V /540,00V)

Overfrequency1				Conformity Range		Possible Range	
ID			Default	Min	Max	Min	Max
.054	f oA	Enable function	on				
.055	f > off	f_{THR} OFF	51,500 Hz	50,000 Hz	55,000 Hz	50,000 Hz	55,000 Hz
.056	f > on	f_{THR} ON	50,10 Hz	50,000 Hz	50,10 Hz	50,000 Hz	55,000 Hz
.057	T f >	Time OFF	50 ms	50 ms	50 ms	50 ms	180000 ms

Underfrequency1				Conformity Range		Possible Range	
ID			Default	Min	Max	Min	Max
.058	f uA	Enable function	on				
.059	f < off	f_{THR} OFF	47,500 Hz	45,000 Hz	50,000 Hz	45,000 Hz	50,000 Hz
.060	f < on	f_{THR} ON	47,500 Hz	47,500 Hz	50,000 Hz	45,000 Hz	50,000 Hz
.061	T f <	Time OFF	50 ms	50 ms	50 ms	50 ms	180000 ms

Frequency measuring in general				Conformity Range			
ID			Default	Min	Max		
.113	F wnd	Window length	100 ms	100 ms	100 ms		

Auxiliary Contact type				Conformity Range		Possible Range	
ID			Default	Min	Max	Min	Max
.099	Contact	Type	n.c. (normally closed)	n.o. (normally opened) n.c. (normally closed)		n.o. (normally opened) n.c. (normally closed)	

					dis. (disabled)
.100	T Contact	Time OFF	Fixed to 500 ms		
.114	I3 STOP	Type	n.c. (normally opened)	n.o. (normally opened) n.c. (normally closed) dis. (disabled)	n.o. (normally opened) n.c. (normally closed) dis. (disabled)

Turn-on delay				Conformity Range		Possible Range	
ID			Default	Min	Max	Min	Max
.102	T on delay	Turn on time	60 s	0 s	300 s	0 s	900 s

Password					
ID			Default	Min	Max
.106	PW1	1st digit of Password	0	0	9
.107	PW2	2nd digit of Password	0	0	9
.108	PW3	3rd digit of Password	0	0	9
.109	PW4	4th digit of Password	0	0	9
Remark:		If all 4 digits of the Password are 0 (default setting) the Password request is skipped			

Errorlogic signalled (shown) on output relay R3. On = it is possible to detect this error Off = it is not possible to show this error on relay R3	
Overvoltage LL (UΔ)	on
Undervoltage LL (UΔ)	on
Overvoltage LN (UY)	on
Undervoltage LN (UY)	on
10-min overvoltage (Ū)	on
Overfrequency (f)	on
Underfrequency (f)	on
RoCoF (Rate of Change of Frequency) (Δf)	on
Phase shift (ΔΦ)	on

Remote shutdown / self-test (R)	on
Contactor feedback contact reports closed, although it should be open (C)	on
Contactor feedback contact reports open, although it should be closed (no error, only info) (c)	on

Device Information		
ID		
.105	SN: xxxxxxxxxx	xxxxxxxxxx = Device Serial Number
	SW: aa.dd.ccb	dd: Software version of Display Software aa: Software version of Measuring Software cc: Index of Configuration set b: Version of Configuration set

10.18 BURGENLAND TOR R25 NS ASYNC [ID 843] Typ A/B low voltage synchr. generators

Connection Mode			Conformity Range	Possible Range
ID		Default		
.003	Connection	4-wire LN	4-wire LN	2-wire LN - 4-wire LL+LN

Nominal Voltage				Conformity Range		Possible Range	
ID			Default	Min	Max	Min	Max
.005	ULN/LL nom	Unom Y Unom Δ	230,00V /400,00V	57,50V /100,00V	230,00V /400,00V	28,75V /50,00V	241,50V /420,00V
Comment:		Default for Uc=21kV and 200:1 voltage transformer or Uc=31,7kV and 300:1					

Functional Safety			Conformity Range	Possible Range
ID		Default		
.007	Errtol	2ch	2ch, 1ch	2ch, 1ch
Remark:		2ch means: 2 channel with functional safety and 2 auxilliary contacts necessary 1ch means: 1 channel without functional safety and 1 auxilliary contact1 necessary		

Overvoltage1 Line to Neutral					Conformity Range		Possible Range	
ID				Default	Min	Max	Min	Max
.018	Ueff >	Enable function		on	on / off		on /off	
.019	Ueff > off	U_{THR} OFF	%Unom /VUnom	111,00% (255,30V)	100,00 % (230,00 V)	130,00% (299,00V)	100,00% (230,00V)	135,00% (310,50V)
.020	Ueff > on	U_{THR} ON	%Unom /VUnom	108,00% (248,40V)	100,00 % (230,00 V)	108,00% (248,40V)	100,00% (230,00V)	135,00% (310,50V)
.021	T Ueff >	Time OFF		60000 ms	50 ms	180000 ms	50 ms	180000 ms
Only active for:		Connection Modes: 2-wire, 4-wire (LN), 4-wire (LN+LL)						

Undervoltage1 Line to Neutral	Conformity Range	Possible Range

ID				Default	Min	Max	Min	Max
.023	Ueff < off	UTHR OFF	%Unom /VUnom	80,00% (184,00V)	10,00% (23,00V)	100,00% (230,00V)	10,00% (23,00V)	100,00% (230,00V)
.024	Ueff < on	UTHR ON	%Unom /VUnom	90,00% (207,00V)	86,00% (197,80V)	100,00% (230,00V)	10,00% (23,00V)	100,00% (230,00V)
.025	T Ueff <	Time OFF		1500 ms	50 ms	180000 ms	50 ms	180000 ms
Only active for:		Connection Modes: 2-wire, 4-wire (LN), 4-wire (LN+LL))						

Overvoltage2 Line to Neutral					Conformity Range		Possible Range	
ID				Default	Min	Max	Min	Max
.034	Ueff>>	Enable function		on	on		on /off	
.035	Ueff>> off	UTHR OFF	%Unom /VUnom	115,00% (264,50V)	100,00% (230,00V)	130,00% (299,00V)	100,00% (230,00V)	135,00% (310,50V)
.036	Ueff>> on	UTHR ON	%Unom /VUnom	108,00% (248,40V)	100,00% (230,00V)	108,00% (248,40V)	100,00% (230,00V)	135,00% (310,50V)
.037	T Ueff>>	Time OFF		100 ms	50 ms	180000 ms	50 ms	180000 ms
Only active for:		Connection Modes: 2-wire, 4-wire (LN), 4-wire (LN+LL)						

Undervoltage2 Line to Neutral					Conformity Range		Possible Range	
ID				Default	Min	Max	Min	Max
.038	Ueff<<	Enable function		on	on		on /off	
.039	Ueff<< off	UTHR OFF	%Unom /VUnom	25,00% (57,50V)	10,00% (23,00V)	100,00% (230,00V)	10,00% (23,00V)	100,00% (230,00V)
.040	Ueff<< on	UTHR ON	%Unom /VUnom	90,00% (207,00V)	86,00% (197,80V)	100,00% (230,00V)	0,00% (0,00V)	100,00% (230,00V)
.041	T Ueff<<	Time OFF		500 ms	50 ms	180000 ms	50 ms	180000 ms
Only active for:		Connection Modes: 2-wire, 4-wire (LN), 4-wire (LN+LL)						

10 minutes average overvoltage					Conformity Range		Possible Range	
ID				Default	Min	Max	Min	Max
.042	U10min	Enable function		off	on / off		on /off	
.043	U10min off	U_{THR} OFF	%Unom /VUnom	111,00% (255,30V /444,00V)	100,00% (230,00V /400,00V)	130,00% (299,00V /520,00V)	100,00% (230,00V /400,00V)	135,00% (310,50V /540,00V)

Overfrequency1				Conformity Range		Possible Range	
ID			Default	Min	Max	Min	Max
.054	f oA	Enable function	on				
.055	f > off	f_{THR} OFF	51,500 Hz	50,000 Hz	55,000 Hz	50,000 Hz	55,000 Hz
.056	f > on	f_{THR} ON	50,10 Hz	50,000 Hz	50,10 Hz	50,000 Hz	55,000 Hz
.057	T f >	Time OFF	50 ms	50 ms	50 ms	50 ms	180000 ms

Underfrequency1				Conformity Range		Possible Range	
ID			Default	Min	Max	Min	Max
.058	f uA	Enable function	on				
.059	f < off	f_{THR} OFF	47,500 Hz	45,000 Hz	50,000 Hz	45,000 Hz	50,000 Hz
.060	f < on	f_{THR} ON	47,500 Hz	47,500 Hz	50,000 Hz	45,000 Hz	50,000 Hz
.061	T f <	Time OFF	50 ms	50 ms	50 ms	50 ms	180000 ms

Frequency measuring in general				Conformity Range			
ID			Default	Min	Max		
.113	F wnd	Window length	100 ms	100 ms	100 ms		

Auxiliary Contact type				Conformity Range		Possible Range	
ID			Default	Min	Max	Min	Max
.099	Contact	Type	n.c. (normally closed)	n.o. (normally opened) n.c. (normally closed)		n.o. (normally opened) n.c. (normally closed)	

					dis. (disabled)
.100	T Contact	Time OFF	Fixed to 500 ms		
.114	I3 STOP	Type	n.c. (normally opened)	n.o. (normally opened) n.c. (normally closed) dis. (disabled)	n.o. (normally opened) n.c. (normally closed) dis. (disabled)

Turn-on delay				Conformity Range		Possible Range	
ID			Default	Min	Max	Min	Max
.102	T on delay	Turn on time	60 s	0 s	300 s	0 s	900 s

Password					
ID			Default	Min	Max
.106	PW1	1st digit of Password	0	0	9
.107	PW2	2nd digit of Password	0	0	9
.108	PW3	3rd digit of Password	0	0	9
.109	PW4	4th digit of Password	0	0	9
Remark:		If all 4 digits of the Password are 0 (default setting) the Password request is skipped			

Errorlogic signalled (shown) on output relay R3. On = it is possible to detect this error Off = it is not possible to show this error on relay R3	
Overvoltage LL (UΔ)	on
Undervoltage LL (UΔ)	on
Overvoltage LN (UY)	on
Undervoltage LN (UY)	on
10-min overvoltage (Ū)	on
Overfrequency (f)	on
Underfrequency (f)	on
RoCoF (Rate of Change of Frequency) (Δf)	on
Phase shift (ΔΦ)	on

Remote shutdown / self-test (R)	on
Contactor feedback contact reports closed, although it should be open (C)	on
Contactor feedback contact reports open, although it should be closed (no error, only info) (c)	on

Device Information		
ID		
.105	SN: xxxxxxxxxx	xxxxxxxxxx = Device Serial Number
	SW: aa.dd.ccb	dd: Software version of Display Software aa: Software version of Measuring Software cc: Index of Configuration set b: Version of Configuration set

10.19 BURGENLAND TOR R25 MS SYNC [ID 892] Typ A/B medium voltage synchr. generators

Connection Mode			Conformity Range	Possible Range
ID		Default		
.003	Connection	3-wire LL	3-wire LL	2-wire LN - 4-wire LL+LN

Nominal Voltage				Conformity Range		Possible Range	
ID			Default	Min	Max	Min	Max
.005	ULN/LL nom	Unom Y Unom Δ	59,23V /103,00V	57,50V /100,00V	230,00V /400,00V	28,75V /50,00V	241,50V /420,00V
Comment:		Default for Uc=21kV and 200:1 voltage transformer or Uc=31,7kV and 300:1					

Functional Safety			Conformity Range	Possible Range
ID		Default		
.007	Errtol	2ch	2ch, 1ch	2ch, 1ch
Remark:		2ch means: 2 channel with functional safety and 2 auxilliary contacts necessary 1ch means: 1 channel without functional safety and 1 auxilliary contact1 necessary		

Overvoltage1 Line to Line					Conformity Range		Possible Range	
ID				Default	Min	Max	Min	Max
.011	U > off	UTHR OFF	%Unom /VUnom	105,00% (108,15V)	100,00% (103,00V)	130,00% (133,90V)	100,00% (103,00V)	135,00% (139,05V)
.012	U > on	UTHR ON	%Unom /VUnom	103,00% (106,09V)	100,00% (103,00V)	108,00% (111,24V)	100,00% (103,00V)	135,00% (139,05V)
.013	T U >	Time OFF		60000 ms	50 ms	180000 ms	50 ms	180000 ms
Only active for:		Connection Modes: 3-wire, 4-wire (LN+LL)						

Undervoltage1 Line to Line		Conformity Range		Possible Range	
ID		Default	Min	Max	Min	Max

.015	U < off	UTHR OFF	%Unom /VUnom	70,00% (72,10V)	10,00% (10,30V)	100,00% (103,00V)	10,00% (10,30V)	100,00% (103,00V)
.016	U < on	UTHR ON	%Unom /VUnom	90,00% (92,70V)	86,00% (88,58V)	100,00% (103,00V)	10,00% (10,30V)	100,00% (103,00V)
.017	T U <	Time OFF		1500 ms	50 ms	180000 ms	50 ms	180000 ms
Only active for:		Connection Modes: 3-wire, 4-wire (LN+LL)						

Overvoltage2 Line to Line					Conformity Range		Possible Range	
ID				Default	Min	Max	Min	Max
.026	U >>	Enable function		on	on		on /off	
.027	U >> off	UTHR OFF	%Unom /VUnom	110,00% (113,30V)	100,00% (103,00V)	130,00% (133,90V)	100,00% (103,00V)	135,00% (139,05V)
.028	U >> on	UTHR ON	%Unom /VUnom	103,00% (106,09V)	100,00% (103,00V)	108,00% (111,24V)	100,00% (103,00V)	135,00% (139,05V)
.029	T U >>	Time OFF		100 ms	50 ms	180000 ms	50 ms	180000 ms
Only active for:		Connection Modes: 3-wire, 4-wire (LN+LL)						

Undervoltage2 Line to Line					Conformity Range		Possible Range	
ID				Default	Min	Max	Min	Max
.030	U <<	Enable function		on	on		on /off	
.031	U << off	UTHR OFF	%Unom /VUnom	30,00% (30,90V)	10,00% (10,30V)	100,00% (103,00V)	10,00% (10,30V)	100,00% (103,00V)
.032	U << on	UTHR ON	%Unom /VUnom	90,00% (92,70V)	86,00% (88,58V)	100,00% (103,00V)	0,00% (0,00V)	100,00% (103,00V)
.033	T U <<	Time OFF		700 ms	50 ms	180000 ms	50 ms	180000 ms
Only active for:		Connection Modes: 3-wire, 4-wire (LN+LL)						

Overfrequency1	Conformity Range	Possible Range

ID			Default	Min	Max	Min	Max
.055	f > off	f_{THR} OFF	51,500 Hz	50,000 Hz	55,000 Hz	50,000 Hz	55,000 Hz
.056	f > on	f_{THR} ON	50,10 Hz	50,000 Hz	50,10 Hz	50,000 Hz	55,000 Hz
.057	T f >	Time OFF	50 ms	50 ms	50 ms	50 ms	180000 ms

Underfrequency1				Conformity Range		Possible Range	
.058	f uA	Enable function	on				
.059	f < off	f_{THR} OFF	47,500 Hz	45,000 Hz	50,000 Hz	45,000 Hz	50,000 Hz
.060	f < on	f_{THR} ON	47,500 Hz	47,500 Hz	50,000 Hz	45,000 Hz	50,000 Hz
.061	T f <	Time OFF	50 ms	50 ms	50 ms	50 ms	180000 ms

Frequency measuring in general				Conformity Range			
ID			Default	Min	Max		
.113	F wnd	Window length	100 ms	100 ms	100 ms		

Auxiliary Contact type				Conformity Range		Possible Range	
ID			Default	Min	Max	Min	Max
.099	Contact	Type	n.c. (normally closed)	n.o. (normally opened) n.c. (normally closed)		n.o. (normally opened) n.c. (normally closed) dis. (disabled)	
.100	T Contact	Time OFF	Fixed to 500 ms				
.114	I3 STOP	Type	n.c. (normally opened)	n.o. (normally opened) n.c. (normally closed) dis. (disabled)		n.o. (normally opened) n.c. (normally closed) dis. (disabled)	

Turn-on delay				Conformity Range		Possible Range	
ID			Default	Min	Max	Min	Max
.102	T on delay	Turn on time	60 s	0 s	300 s	0 s	900 s

Password					
ID			Default	Min	Max
.106	PW1	1st digit of Password	0	0	9
.107	PW2	2nd digit of Password	0	0	9
.108	PW3	3rd digit of Password	0	0	9
.109	PW4	4th digit of Password	0	0	9
Remark:		If all 4 digits of the Password are 0 (default setting) the Password request is skipped			

Errorlogic signalled (shown) on output relay R3. On = it is possible to detect this error Off = it is not possible to show this error on relay R3	
Overvoltage LL (UΔ)	on
Undervoltage LL (UΔ)	on
Overvoltage LN (UY)	on
Undervoltage LN (UY)	on
10-min overvoltage (Ū)	on
Overfrequency (f)	on
Underfrequency (f)	on
RoCoF (Rate of Change of Frequency) (Δf)	on
Phase shift (ΔΦ)	on
Remote shutdown / self-test (R)	on
Contactor feedback contact reports closed, although it should be open (C)	on
Contactor feedback contact reports open, although it should be closed (no error, only info) (c)	on

Device Information		
ID		
.105	SN: xxxxxxxxxx	xxxxxxxxxx = Device Serial Number
	SW: aa.dd.ccb	dd: Software version of Display Software aa: Software version of Measuring Software

		cc: Index of Configuration set b: Version of Configuration set

10.20 BURGENLAND TOR R25 MS ASYNC [ID 893] Typ A/B medium voltage asynchr. generators

Connection Mode			Conformity Range	Possible Range
ID		Default		
.003	Connection	3-wire LL	3-wire LL	2-wire LN - 4-wire LL+LN

Nominal Voltage				Conformity Range		Possible Range	
ID			Default	Min	Max	Min	Max
.005	ULN/LL nom	Unom Y Unom Δ	59,23V /103,00V	57,50V /100,00V	230,00V /400,00V	28,75V /50,00V	241,50V /420,00V
Comment:		Default for Uc=21kV and 200:1 voltage transformer or Uc=31,7kV and 300:1					

Functional Safety			Conformity Range	Possible Range
ID		Default		
.007	Errtol	2ch	2ch, 1ch	2ch, 1ch
Remark:		2ch means: 2 channel with functional safety and 2 auxilliary contacts necessary 1ch means: 1 channel without functional safety and 1 auxilliary contact1 necessary		

Overvoltage1 Line to Line					Conformity Range		Possible Range	
ID				Default	Min	Max	Min	Max
.011	U > off	UTHR OFF	%Unom /VUnom	105,00% (108,15V)	100,00% (103,00V)	130,00% (133,90V)	100,00% (103,00V)	135,00% (139,05V)
.012	U > on	UTHR ON	%Unom /VUnom	103,00% (106,09V)	100,00% (103,00V)	108,00% (111,24V)	100,00% (103,00V)	135,00% (139,05V)
.013	T U >	Time OFF		60000 ms	50 ms	180000 ms	50 ms	180000 ms
Only active for:		Connection Modes: 3-wire, 4-wire (LN+LL)						

Undervoltage1 Line to Line		Conformity Range		Possible Range	
ID		Default	Min	Max	Min	Max

.015	U < off	U_{THR} OFF	%Unom /VUnom	80,00% (82,40V)	10,00% (10,30V)	100,00% (103,00V)	10,00% (10,30V)	100,00% (103,00V)
.016	U < on	U_{THR} ON	%Unom /VUnom	90,00% (92,70V)	86,00% (88,58V)	100,00% (103,00V)	10,00% (10,30V)	100,00% (103,00V)
.017	T U <	Time OFF		1500 ms	50 ms	180000 ms	50 ms	180000 ms
Only active for:		Connection Modes: 3-wire, 4-wire (LN+LL)						

Overvoltage2 Line to Line					Conformity Range		Possible Range	
ID				Default	Min	Max	Min	Max
.026	U >>	Enable function		on	on		on /off	
.027	U >> off	U_{THR} OFF	%Unom /VUnom	110,00% (113,30V)	100,00 % (103,00 V)	130,00% (133,90V)	100,00% (103,00V)	135,00% (139,05V)
.028	U >> on	U_{THR} ON	%Unom /VUnom	103,00% (106,09V)	100,00 % (103,00 V)	108,00% (111,24V)	100,00% (103,00V)	135,00% (139,05V)
.029	T U >>	Time OFF		100 ms	50 ms	180000 ms	50 ms	180000 ms
Only active for:		Connection Modes: 3-wire, 4-wire (LN+LL)						

Undervoltage2 Line to Line					Conformity Range		Possible Range	
ID				Default	Min	Max	Min	Max
.030	U <<	Enable function		on	on		on /off	
.031	U << off	U_{THR} OFF	%Unom /VUnom	30,00% (30,90V)	10,00% (10,30V)	100,00% (103,00V)	10,00% (10,30V)	100,00% (103,00V)
.032	U << on	U_{THR} ON	%Unom /VUnom	90,00% (92,70V)	86,00% (88,58V)	100,00% (103,00V)	0,00% (0,00V)	100,00% (103,00V)
.033	T U <<	Time OFF		700 ms	50 ms	180000 ms	50 ms	180000 ms
Only active for:		Connection Modes: 3-wire, 4-wire (LN+LL)						

Overfrequency1	Conformity Range	Possible Range

ID			Default	Min	Max	Min	Max
.055	f > off	f_{THR} OFF	51,500 Hz	50,000 Hz	55,000 Hz	50,000 Hz	55,000 Hz
.056	f > on	f_{THR} ON	50,10 Hz	50,000 Hz	50,10 Hz	50,000 Hz	55,000 Hz
.057	T f >	Time OFF	50 ms	50 ms	50 ms	50 ms	180000 ms

Underfrequency1				Conformity Range		Possible Range	
ID			Default	Min	Max	Min	Max
.059	f < off	f_{THR} OFF	47,500 Hz	45,000 Hz	50,000 Hz	45,000 Hz	50,000 Hz
.060	f < on	f_{THR} ON	47,500 Hz	47,500 Hz	50,000 Hz	45,000 Hz	50,000 Hz
.061	T f <	Time OFF	50 ms	50 ms	50 ms	50 ms	180000 ms

Frequency measuring in general				Conformity Range			
ID			Default	Min	Max		
.113	F wnd	Window length	100 ms	100 ms	100 ms		

Auxiliary Contact type				Conformity Range		Possible Range	
ID			Default	Min	Max	Min	Max
.099	Contact	Type	n.c. (normally closed)	n.o. (normally opened) n.c. (normally closed)		n.o. (normally opened) n.c. (normally closed) dis. (disabled)	
.100	T Contact	Time OFF	Fixed to 500 ms				
.114	I3 STOP	Type	n.c. (normally opened)	n.o. (normally opened) n.c. (normally closed) dis. (disabled)		n.o. (normally opened) n.c. (normally closed) dis. (disabled)	

Turn-on delay				Conformity Range		Possible Range	
ID			Default	Min	Max	Min	Max
.102	T on delay	Turn on time	60 s	0 s	300 s	0 s	900 s

Password					
ID			Default	Min	Max
.106	PW1	1st digit of Password	0	0	9
.107	PW2	2nd digit of Password	0	0	9
.108	PW3	3rd digit of Password	0	0	9
.109	PW4	4th digit of Password	0	0	9
Remark:		If all 4 digits of the Password are 0 (default setting) the Password request is skipped			

Errorlogic signalled (shown) on output relay R3. On = it is possible to detect this error Off = it is not possible to show this error on relay R3	
Overvoltage LL (UΔ)	on
Undervoltage LL (UΔ)	on
Overvoltage LN (UY)	on
Undervoltage LN (UY)	on
10-min overvoltage ($\bar{U}$)	on
Overfrequency (f)	on
Underfrequency (f)	on
RoCoF (Rate of Change of Frequency) (Δf)	on
Phase shift (ΔΦ)	on
Remote shutdown / self-test (R)	on
Contactor feedback contact reports closed, although it should be open (C)	on
Contactor feedback contact reports open, although it should be closed (no error, only info) (c)	on

Device Information		
ID		
.105	SN: xxxxxxxxxx SW: aa.dd.ccb	xxxxxxxxxx = Device Serial Number dd: Software version of Display Software aa: Software version of Measuring Software

		cc: Index of Configuration set b: Version of Configuration set

10.21 VDE-AR-N 4105:2018 ≤50kW [ID 311]

Connection Mode			Conformity Range	Possible Range
ID		Default		
.003	Connection	4-wire (LN+LL)	2-wire, 3-wire, 4-wire (LN), 4-wire (LN+LL)	2-wire, 3-wire, 4-wire (LN), 4-wire (LN+LL)

Nominal Voltage					Conformity Range		Possible Range	
ID				Default	Min	Max	Min	Max
.005	ULN/LL nom	Unom Y Unom Δ	V V	Fixed to 230.0 / 400.0				

Functional Safety			Conformity Range	Possible Range
ID		Default		
.007	Errtol	1ch	1ch	2ch, 1ch
Remark:		2ch means: 2 channel with functional safety and 2 auxilliary contacts necessary 1ch means: 1 channel without functional safety and 1 auxilliary contact1 necessary		

Overvoltage1 Line to Line					Conformity Range		Possible Range	
ID				Default	Min	Max	Min	Max
.011	ULL >> off	U_{THR} OFF	%Unom	Fixed to 115% U_{NOM}				
.012	ULL >> on	U_{THR} ON	%Unom	110	110	110	100	110
		Time OFF	ms	Fixed to fastest possible disconnection				
Comment:		ULL >> on has a fixed offset of 0.5% U_{NOM} subtracted from the displayed value						

Undervoltage1 Line to Line					Conformity Range		Possible Range	
ID				Default	Min	Max	Min	Max
.015	ULL < off	U_{THR} OFF	%Unom	80	80	85	80	85
.016	ULL < on	U_{THR} ON	%Unom	85	85	85	85	100
		Time OFF	ms	Fixed to fastest possible disconnection				
Comment:		ULL < on has a fixed offset of 0.5% U_{NOM} added to the displayed value						

Overvoltage1 Line to Neutral					Conformity Range		Possible Range	
ID				Default	Min	Max	Min	Max
.019	ULN >> off	U_{THR} OFF	%Unom	Fixed to 115% U_{NOM}				
.020	ULN >> on	U_{THR} ON	%Unom	110	110	110	100	110
		Time OFF	ms	Fixed to fastest possible disconnection				
Comment:		ULN >> on has a fixed offset of 0.5% U_{NOM} subtracted from the displayed value						

Undervoltage1 Line to Neutral					Conformity Range		Possible Range	
ID				Default	Min	Max	Min	Max
.023	ULN < off	U_{THR} OFF	%Unom	80	80	85	80	85
.024	ULN < on	U_{THR} ON	%Unom	85	85	85	85	100
		Time OFF	ms	Fixed to fastest possible disconnection				
Comment:		ULN < on has a fixed offset of 0.5% U_{NOM} added to the displayed value						

10 minutes average overvoltage					Conformity Range		Possible Range	
ID				Default	Min	Max	Min	Max
.043	U > off	U_{THR} OFF	%Unom	110	110	115	110	115
		U_{THR} ON	%Unom	Fixed Hysteresis (0.9% U_{NOM})				
		Time OFF	ms	Fixed to fastest possible disconnection				

Overfrequency1					Conformity Range		Possible Range	
ID				Default	Min	Max	Min	Max
.055	f > off	f_{THR} OFF	Hz	Fixed to 51.50Hz				
.056	f > on	f_{THR} ON	Hz	50.10	50.10	50.10	50.00	50.10
		Time OFF	ms	Fixed to fastest possible disconnection				

Underfrequency1					Conformity Range		Possible Range	
ID				Default	Min	Max	Min	Max
.059	f < off	f_{THR} OFF	Hz	Fixed to 47.50Hz				
.060	f < on	f_{THR} ON	Hz	47.50	47.50	47.50	47.50	50.00
		Time OFF	ms	Fixed to fastest possible disconnection				

Comment:	f < on has a fixed offset of 0.025 Hz added to the displayed value

Random overfrequency					Conformity Range		Possible Range	
ID				Default	Min	Max	Min	Max
.086	f > random	Enable function		off	on / off		on /off	
.087	f > random	f_{THR} OFF	Hz		50.20	51.50	50.20	51.50
		f_{THR} ON	Hz	Fixed reconnection frequency of 50.10Hz				
		Time OFF	ms	Fixed to fastest possible disconnection				
Comment:		The random f_{THR} OFF threshold is shown in .087 and cannot be edited						

Frequency measuring in general					Conformity Range		Possible Range	
ID				Default	Min	Max	Min	Max
.113	F wnd	Window length	ms	Fixed window length 100ms				

Auxiliary Contact type					Conformity Range		Possible Range	
ID				Default	Min	Max	Min	Max
.099	Contact	Type		n.c. (normally closed)	n.o. (normally opened) n.c. (normally closed)		n.o. (normally opened) n.c. (normally closed) dis. (disabled)	
.100	T Contact	Time OFF	ms	Fixed to 100ms				
.110	T ConDelOn	Time ON	ms	100	100	10000	100	300000
.114	I3 STOP	Type		n.o. (normally opened)	n.o. (normally opened) n.c. (normally closed) dis. (disabled)		n.o. (normally opened) n.c. (normally closed) dis. (disabled)	

Turn-on delay					Conformity Range		Possible Range	
ID				Default	Min	Max	Min	Max
.102	Ton delay	Turn on time	s	60	60	60	1	900

Random Turn-on delay					Conformity Range		Possible Range	
ID				Default	Min	Max	Min	Max
.103	Ton random	Enable function		off	on / off		on / off	
.104	Ton random	Turn on time	s		60	600	60	600
Comment:	The random time value is shown in .104 and cannot be edited							

Password					
ID			Default	Min	Max
.106	PW1	1st digit of Password	4	0	9
.107	PW2	2nd digit of Password	1	0	9
.108	PW3	3rd digit of Password	0	0	9
.109	PW4	4th digit of Password	5	0	9
Remark:		If all 4 digits of the Password are 0 (default setting) the Password request is skipped			

Errorlogic signalled (shown) on output relay R3. On = it is possible to detect this error Off = it is not possible to show this error on relay R3	
Overvoltage LL (UΔ)	off
Undervoltage LL (UΔ)	off
Overvoltage LN (UY)	off
Undervoltage LN (UY)	off
10-min overvoltage (Ū)	off
Overfrequency (f)	off
Underfrequency (f)	off
RoCoF (Rate of Change of Frequency) (Δf)	off
Phase shift (ΔΦ)	off
Remote shutdown / self-test (R)	off
Contactor feedback contact reports closed, although it should be open (C)	on
Contactor feedback contact reports open, although it should be closed (no error, only info) (c)	on

Device Information

ID		
.105	ID: xxxxxxxxxx SW: aa.dd.ccb	xxxxxxxxxx = Device ID dd: Software version of Display Software aa: Software version of Measuring Software cc: Index of Configuration set b: Version of Configuration set

10.22 VDE-AR-N 4105:2018 >50kW [ID 312]

Connection Mode			Conformity Range	Possible Range
ID		Default		
.003	Connection	4-wire (LN+LL)	2-wire, 3-wire, 4-wire (LN), 4-wire (LN+LL)	2-wire, 3-wire, 4-wire (LN), 4-wire (LN+LL)

Nominal Voltage					Conformity Range		Possible Range	
ID				Default	Min	Max	Min	Max
.005	ULN/LL nom	Unom Y Unom Δ	V V	Fixed to 230.0 / 400.0				

Functional Safety			Conformity Range	Possible Range
ID		Default		
.007	Errtol	1ch	1ch	2ch, 1ch
Remark:		2ch means: 2 channel with functional safety and 2 auxilliary contacts necessary 1ch means: 1 channel without functional safety and 1 auxilliary contact1 necessary		

Overvoltage1 Line to Line					Conformity Range		Possible Range	
ID				Default	Min	Max	Min	Max
.011	ULL >> off	UTHR OFF	%Unom	Fixed to 125% UNOM				
.012	ULL >> on	UTHR ON	%Unom	110	110	110	100	110
		Time OFF	ms	Fixed to fastest possible disconnection				
Comment:		ULL >> on has a fixed offset of 0.5% UNOM subtracted from the displayed value						

Undervoltage1 Line to Line					Conformity Range		Possible Range	
ID				Default	Min	Max	Min	Max
.015	ULL < off	UTHR OFF	%Unom	Fixed to 80% UNOM				
.016	ULL < on	UTHR ON	%Unom	85	85	85	85	100
.017	T ULL <	Time OFF	ms	1000	50	1000	50	10000
Comment:		ULL < on has a fixed offset of 0.5% UNOM added to the displayed value						

Overvoltage1 Line to Neutral					Conformity Range		Possible Range	
ID				Default	Min	Max	Min	Max
.019	ULN >> off	U_{THR} OFF	%Unom	Fixed to 125% U_{NOM}				
.020	ULN >> on	U_{THR} ON	%Unom	110	110	110	100	110
		Time OFF	ms	Fixed to fastest possible disconnection				
Comment:		ULN >> on has a fixed offset of 0.5% U_{NOM} subtracted from the displayed value						

Undervoltage1 Line to Neutral					Conformity Range		Possible Range	
ID				Default	Min	Max	Min	Max
.023	ULN < off	U_{THR} OFF	%Unom	Fixed to 80% U_{NOM}				
.024	ULN < on	U_{THR} ON	%Unom	85	85	85	85	100
.025	T ULN <	Time OFF	ms	1000	50	1000	50	10000
Comment:		ULN < on has a fixed offset of 0.5% U_{NOM} added to the displayed value						

Undervoltage2 Line to Line					Conformity Range		Possible Range	
ID				Default	Min	Max	Min	Max
.031	ULL << off	U_{THR} OFF	%Unom	Fixed to 45% U_{NOM}				
.032	ULL << on	U_{THR} ON	%Unom	85	85	85	85	100
.033	T ULL <<	Time OFF	ms	300	50	300	50	10000
Comment:		ULL << on has a fixed offset of 0.5% U_{NOM} added to the displayed value						

Undervoltage2 Line to Neutral					Conformity Range		Possible Range	
ID				Default	Min	Max	Min	Max
.039	ULN << off	U_{THR} OFF	%Unom	Fixed to 45% U_{NOM}				
.040	ULN << on	U_{THR} ON	%Unom	85	85	85	85	100
.041	T ULN <<	Time OFF	ms	200	50	300000	50	300000
Comment:		ULN << on has a fixed offset of 0.5% U_{NOM} added to the displayed value						

10 minutes average overvoltage					Conformity Range		Possible Range	
ID				Default	Min	Max	Min	Max
.043	U > off	U_{THR} OFF	%Unom	110	110	115	110	115

		U_{THR} ON	%Unom	Fixed Hysteresis (0.9% U_{NOM})
		Time OFF	ms	Fixed to fastest possible disconnection

Overfrequency1					Conformity Range		Possible Range	
ID				Default	Min	Max	Min	Max
.055	f > off	f_{THR} OFF	Hz	Fixed to 51.50Hz				
.056	f > on	f_{THR} ON	Hz	50.10	50.10	50.10	50.00	50.10
		Time OFF	ms	Fixed to fastest possible disconnection				

Underfrequency1					Conformity Range		Possible Range	
ID				Default	Min	Max	Min	Max
.059	f < off	f_{THR} OFF	Hz	Fixed to 47.50Hz				
.060	f < on	f_{THR} ON	Hz	47.50	47.50	47.50	47.50	50.00
		Time OFF	ms	Fixed to fastest possible disconnection				
Comment:		f < on has a fixed offset of 0.025 Hz added to the displayed value						

Random overfrequency					Conformity Range		Possible Range	
ID				Default	Min	Max	Min	Max
.086	f > random	Enable function		off	on / off		on /off	
.087	f > random	f_{THR} OFF	Hz		50.20	51.50	50.20	51.50
		f_{THR} ON	Hz	Fixed reconnection frequency of 50.10Hz				
		Time OFF	ms	Fixed to fastest possible disconnection				
Comment:		The random f_{THR} OFF threshold is shown in .087 and cannot be edited						

Frequency measuring in general					Conformity Range		Possible Range	
ID				Default	Min	Max	Min	Max
.113	F wnd	Window length	ms	Fixed window length 100ms				

Auxiliary Contact type				Conformity Range		Possible Range	
ID			Default	Min	Max	Min	Max
.099	Contact	Type	n.c. (normally closed)	n.o. (normally opened)		n.o. (normally opened)	

					n.c. (normally closed)		n.c. (normally closed) dis. (disabled)	
.100	T Contact	Time OFF	ms	Fixed to 100ms				
.110	T ConDelOn	Time ON	ms	100	100	10000	100	300000
.114	I3 STOP	Type	n.o. (normally opened)		n.o. (normally opened) n.c. (normally closed) dis. (disabled)		n.o. (normally opened) n.c. (normally closed) dis. (disabled)	

Turn-on delay					Conformity Range		Possible Range	
ID				Default	Min	Max	Min	Max
.102	Ton delay	Turn on time	s	60	60	60	1	900

Random Turn-on delay					Conformity Range		Possible Range	
ID				Default	Min	Max	Min	Max
.103	Ton random	Enable function		off	on / off		on / off	
.104	Ton random	Turn on time	s		60	600	60	600
Comment:		The random time value is shown in .104 and cannot be edited						

Password					
ID			Default	Min	Max
.106	PW1	1st digit of Password	4	0	9
.107	PW2	2nd digit of Password	1	0	9
.108	PW3	3rd digit of Password	0	0	9
.109	PW4	4th digit of Password	5	0	9
Remark:		If all 4 digits of the Password are 0 (default setting) the Password request is skipped			

Errorlogic signalled (shown) on output relay R3. On = it is possible to detect this error Off = it is not possible to show this error on relay R3	
Overvoltage LL (UΔ)	off

Undervoltage LL (UΔ)	off
Overvoltage LN (UY)	off
Undervoltage LN (UY)	off
10-min overvoltage (Ū)	off
Overfrequency (f)	off
Underfrequency (f)	off
RoCoF (Rate of Change of Frequency) (Δf)	off
Phase shift (ΔΦ)	off
Remote shutdown / self-test (R)	off
Contactor feedback contact reports closed, although it should be open (C)	on
Contactor feedback contact reports open, although it should be closed (no error, only info) (c)	on

Device Information		
ID		
.105	ID: xxxxxxxxxx	xxxxxxxxxx = Device ID
	SW: aa.dd.ccb	dd: Software version of Display Software aa: Software version of Measuring Software cc: Index of Configuration set b: Version of Configuration set

10.23 VDE-AR-N 4105:2018 Umr [ID 313]

Connection Mode			Conformity Range	Possible Range
ID		Default		
.003	Connection	4-wire (LN+LL)	2-wire, 3-wire, 4-wire (LN), 4-wire (LN+LL)	2-wire, 3-wire, 4-wire (LN), 4-wire (LN+LL)

Nominal Voltage					Conformity Range		Possible Range	
ID				Default	Min	Max	Min	Max
.005	ULN/LL nom	Unom Y Unom Δ	V V	Fixed to 230.0 / 400.0				

Functional Safety			Conformity Range	Possible Range
ID		Default		
.007	Errtol	2ch	2ch	2ch, 1ch
Remark:		2ch means: 2 channel with functional safety and 2 auxilliary contacts necessary 1ch means: 1 channel without functional safety and 1 auxilliary contact1 necessary		

Overvoltage1 Line to Line					Conformity Range		Possible Range	
ID				Default	Min	Max	Min	Max
.011	ULL >> off	UTHR OFF	%Unom	Fixed to 125% UNOM				
.012	ULL >> on	UTHR ON	%Unom	110	110	110	100	110
		Time OFF	ms	Fixed to fastest possible disconnection				
Comment:		ULL >> on has a fixed offset of 0.5% UNOM subtracted from the displayed value						

Undervoltage1 Line to Line					Conformity Range		Possible Range	
ID				Default	Min	Max	Min	Max
.015	ULL < off	UTHR OFF	%Unom	Fixed to 80% UNOM				
.016	ULL < on	UTHR ON	%Unom	85	85	85	85	100
		Time OFF	ms	Fixed to 3000ms				
Comment:		ULL < on has a fixed offset of 0.5% UNOM added to the displayed value						

Overvoltage1 Line to Neutral					Conformity Range		Possible Range	
ID				Default	Min	Max	Min	Max
.019	ULN >> off	U_{THR} OFF	%Unom	Fixed to 125% U_{NOM}				
.020	ULN >> on	U_{THR} ON	%Unom	110	110	110	100	110
		Time OFF	ms	Fixed to fastest possible disconnection				
Comment:		ULN >> on has a fixed offset of 0.5% U_{NOM} subtracted from the displayed value						

Undervoltage1 Line to Neutral					Conformity Range		Possible Range	
ID				Default	Min	Max	Min	Max
.023	ULN < off	U_{THR} OFF	%Unom	Fixed to 80% U_{NOM}				
.024	ULN < on	U_{THR} ON	%Unom	85	85	85	85	100
		Time OFF	ms	Fixed to 3000ms				
Comment:		ULN < on has a fixed offset of 0.5% U_{NOM} added to the displayed value						

Undervoltage2 Line to Line					Conformity Range		Possible Range	
ID				Default	Min	Max	Min	Max
.031	ULL << off	U_{THR} OFF	%Unom	Fixed to 45% U_{NOM}				
.032	ULL << on	U_{THR} ON	%Unom	85	85	85	85	100
		Time OFF	ms	Fixed to 300ms				
Comment:		ULL << on has a fixed offset of 0.5% U_{NOM} added to the displayed value						

Undervoltage2 Line to Neutral					Conformity Range		Possible Range	
ID				Default	Min	Max	Min	Max
.039	ULN << off	U_{THR} OFF	%Unom	Fixed to 45% U_{NOM}				
.040	ULN << on	U_{THR} ON	%Unom	85	85	85	85	100
		Time OFF	ms	Fixed to 300ms				
Comment:		ULN << on has a fixed offset of 0.5% U_{NOM} added to the displayed value						

10 minutes average overvoltage					Conformity Range		Possible Range	
ID				Default	Min	Max	Min	Max
.043	U > off	U_{THR} OFF	%Unom	110	110	115	110	115

		U_{THR} ON	%Unom	Fixed Hysteresis (0.9% U_{NOM})
		Time OFF	ms	Fixed to fastest possible disconnection

Overfrequency1					Conformity Range		Possible Range	
ID				Default	Min	Max	Min	Max
.055	f > off	f_{THR} OFF	Hz	Fixed to 51.50Hz				
.056	f > on	f_{THR} ON	Hz	50.10	50.10	50.10	50.00	50.10
		Time OFF	ms	Fixed to fastest possible disconnection				

Underfrequency1					Conformity Range		Possible Range	
ID				Default	Min	Max	Min	Max
.059	f < off	f_{THR} OFF	Hz	Fixed to 47.50Hz				
.060	f < on	f_{THR} ON	Hz	47.50	47.50	47.50	47.50	50.00
		Time OFF	ms	Fixed to fastest possible disconnection				
Comment:		f < on has a fixed offset of 0.025 Hz added to the displayed value						

Random overfrequency					Conformity Range		Possible Range	
ID				Default	Min	Max	Min	Max
.086	f > random	Enable function		off	on / off		on /off	
.087	f > random	f_{THR} OFF	Hz		50.20	51.50	50.20	51.50
		f_{THR} ON	Hz	Fixed reconnection frequency of 50.10Hz				
		Time OFF	ms	Fixed to fastest possible disconnection				
Comment:		The random f_{THR} OFF threshold is shown in .087 and cannot be edited						

Frequency measuring in general					Conformity Range		Possible Range	
ID				Default	Min	Max	Min	Max
.113	F wnd	Window length	ms	Fixed window length 100ms				

Auxiliary Contact type				Conformity Range		Possible Range	
ID			Default	Min	Max	Min	Max
.099	Contact	Type	n.c. (normally closed)	n.o. (normally opened)		n.o. (normally opened)	

					n.c. (normally closed)		n.c. (normally closed) dis. (disabled)	
.100	T Contact	Time OFF	ms	Fixed to 100ms				
.110	T ConDelOn	Time ON	ms	100	100	10000	100	300000
.114	I3 STOP	Type	n.o. (normally opened)		n.o. (normally opened) n.c. (normally closed) dis. (disabled)		n.o. (normally opened) n.c. (normally closed) dis. (disabled)	

Turn-on delay					Conformity Range		Possible Range	
ID				Default	Min	Max	Min	Max
.102	Ton delay	Turn on time	s	60	60	60	1	900

Random Turn-on delay					Conformity Range		Possible Range	
ID				Default	Min	Max	Min	Max
.103	Ton random	Enable function		off	on / off		on / off	
.104	Ton random	Turn on time	s		60	600	60	600
Comment:		The random time value is shown in .104 and cannot be edited						

Password					
ID			Default	Min	Max
.106	PW1	1st digit of Password	4	0	9
.107	PW2	2nd digit of Password	1	0	9
.108	PW3	3rd digit of Password	0	0	9
.109	PW4	4th digit of Password	5	0	9
Remark:		If all 4 digits of the Password are 0 (default setting) the Password request is skipped			

Errorlogic signalled (shown) on output relay R3.

On = it is possible to detect this error

Off = it is not possible to show this error on relay R3

Overvoltage LL (UΔ)	off

Undervoltage LL (UΔ)	off
Overvoltage LN (UY)	off
Undervoltage LN (UY)	off
10-min overvoltage (Ū)	off
Overfrequency (f)	off
Underfrequency (f)	off
RoCoF (Rate of Change of Frequency) (Δf)	off
Phase shift (ΔΦ)	off
Remote shutdown / self-test (R)	off
Contactor feedback contact reports closed, although it should be open (C)	on
Contactor feedback contact reports open, although it should be closed (no error, only info) (c)	on

Device Information		
ID		
.105	ID: xxxxxxxxxx SW: aa.dd.ccb	xxxxxxxxxx = Device ID dd: Software version of Display Software aa: Software version of Measuring Software cc: Index of Configuration set b: Version of Configuration set

10.24 VDE-AR-N 4110:2018 TR3-25 [ID 707]

Connection Mode			Conformity Range	Possible Range
ID		Default		
.003	Connection	4-wire (LN)	3-wire, 4-wire (LN)	2-wire, 3-wire, 4-wire (LN), 4-wire (LN+LL)

Nominal Voltage					Conformity Range		Possible Range	
ID				Default	Min	Max	Min	Max
.005	ULN/LL nom	Unom Y Unom Δ	V V	230.0 400.0	57.5 100.0	230.0 400.0	28.8 50.0	241.4 420.0

Functional Safety			Conformity Range	Possible Range
ID		Default		
.007	Errtol	Fixed to 1ch		
Remark:		1ch means: 1 channel without functional safety and 1 auxilliary contact1 necessary		

Overvoltage1 Line to Line					Conformity Range		Possible Range	
ID				Default	Min	Max	Min	Max
.010	ULL>	Enable function		on	on / off		on / off	
.011	ULL > off	U_{THR} OFF	%Unom	110	100	130	100	135
.012	ULL > on	U_{THR} ON	%Unom	109	103	109	100	135
.013	T ULL >	Time OFF	ms	180000	100	180000	100	180000
Only active for:		Connection Modes: 3-wire, 4-wire (LN+LL)						

Undervoltage1 Line to Line					Conformity Range		Possible Range	
ID				Default	Min	Max	Min	Max
.015	ULL < off	U_{THR} OFF	%Unom	80	10	100	10	100
.016	ULL < on	U_{THR} ON	%Unom	95	95	95	10	100
.017	T ULL <	Time OFF	ms	1500	1500	2400	50	60000
Comment:		ULL < on has a fixed offset of 0.5% U_{NOM} added to the displayed value						

Only active for:	Connection Modes: 3-wire, 4-wire (LN+LL)

Overvoltage1 Line to Neutral					Conformity Range		Possible Range	
ID				Default	Min	Max	Min	Max
.018	ULN >	Enable function		on	on / off		on / off	
.019	ULN > off	U_{THR} OFF	%Unom	110	100	130	100	135
.020	ULN > on	U_{THR} ON	%Unom	109	103	109	100	135
.021	T ULN >	Time OFF	ms	180000	100	180000	100	180000
Only active for:		Connection Modes: 2-wire, 4-wire (LN), 4-wire (LN+LL)						

Undervoltage1 Line to Neutral					Conformity Range		Possible Range	
ID				Default	Min	Max	Min	Max
.023	ULN < off	U_{THR} OFF	%Unom	80	10	100	10	100
.024	ULN < on	U_{THR} ON	%Unom	95	95	95	10	100
.025	T ULN <	Time OFF	ms	1500	1500	2400	50	60000
Comment:		ULN < on has a fixed offset of 0.5% U_{NOM} added to the displayed value						
Only active for:		Connection Modes: 2-wire, 4-wire (LN), 4-wire (LN+LL))						

Overvoltage2 Line to Line					Conformity Range		Possible Range	
ID				Default	Min	Max	Min	Max
.026	ULL >>	Enable function		on	on		on / off	
.027	ULL >> off	U_{THR} OFF	%Unom	125	100	130	100	135
.028	ULL >> on	U_{THR} ON	%Unom	124	103	124	100	135
.029	T ULL >>	Time OFF	ms	100	100	100	100	10000
Only active for:		Connection Modes: 3-wire, 4-wire (LN+LL)						

Undervoltage2 Line to Line					Conformity Range		Possible Range	
ID				Default	Min	Max	Min	Max
.031	ULL << off	U_{THR} OFF	%Unom	30	10	100	10	100
.032	ULL << on	U_{THR} ON	%Unom	95	95	95	10	100

.033	T ULL <<	Time OFF	ms	800	800	800	50	60000
Only active for:		Connection Modes: 3-wire, 4-wire (LN+LL)						
Comment:		ULL << on has a fixed offset of 0.5% U_{NOM} added to the displayed value						

Overvoltage2 Line to Neutral					Conformity Range		Possible Range	
ID				Default	Min	Max	Min	Max
.034	ULN >>	Enable function		on	on		on / off	
.035	ULN >> off	U_{THR} OFF	%Unom	125	100	130	100	135
.036	ULN >> on	U_{THR} ON	%Unom	124	103	124	100	135
.037	T ULN >>	Time OFF	ms	100	100	100	100	10000
Only active for:		Connection Modes: 2-wire, 4-wire (LN), 4-wire (LN+LL)						

Undervoltage2 Line to Neutral					Conformity Range		Possible Range	
ID				Default	Min	Max	Min	Max
.039	ULN << off	U_{THR} OFF	%Unom	30	10	100	10	100
.040	ULN << on	U_{THR} ON	%Unom	95	95	95	10	100
.041	T ULN <<	Time OFF	ms	800	800	800	50	60000
Only active for:		Connection Modes: 2-wire, 4-wire (LN), 4-wire (LN+LL)						
Comment:		ULN << on has a fixed offset of 0.5% U_{NOM} added to the displayed value						

Overfrequency1					Conformity Range		Possible Range	
ID				Default	Min	Max	Min	Max
.055	f > off	f_{THR} OFF	Hz	51.50	50.00	55.00	50.00	55.00
.056	f > on	f_{THR} ON	Hz	50.10	50.10	50.10	50.00	55.00
.057	T f >	Time OFF	ms	5000	150	5000	150	10000
Comment:		f > on has a fixed offset of 0.01 Hz subtracted to the displayed value						

Underfrequency1					Conformity Range		Possible Range	
ID				Default	Min	Max	Min	Max
.059	f < off	f_{THR} OFF	Hz	47.50	45.00	50.00	45.00	50.00
.060	f < on	f_{THR} ON	Hz	49.90	49.90	49.90	45.00	50.00

.061	T f <	Time OFF	ms	50	50	70	50	10000
Comment:		f < off has a fixed offset of 0.01 Hz added to the displayed value f < on has a fixed offset of 0.01 Hz added to the displayed value						

Overfrequency 2					Conformity Range		Possible Range	
ID				Default	Min	Max	Min	Max
.063	f >> off	f_{THR} OFF	Hz	52.50	50.00	55.00	50.00	55.00
.064	f >> on	f_{THR} ON	Hz	50.10	50.10	50.10	50.00	55.00
.065	T f >>	Time OFF	ms	50	50	70	50	10000
Comment:		f >> off has a fixed offset of 0.01 Hz subtracted to the displayed value						

Frequency measuring in general					Conformity Range		Possible Range	
ID				Default	Min	Max	Min	Max
.113	F wnd	Window length	ms	Fixed window length 100ms				

Auxiliary Contact type				Conformity Range		Possible Range	
ID			Default	Min	Max	Min	Max
.099	Contact	Type	dis. (disabled)	n.o. (normally opened) n.c. (normally closed) dis. (disabled)		n.o. (normally opened) n.c. (normally closed) dis. (disabled)	
.100	T Contact	Time OFF	ms	Fixed to 500ms			
.114	I3 STOP	Type	n.o. (normally opened)	n.o. (normally opened) n.c. (normally closed) dis. (disabled)		n.o. (normally opened) n.c. (normally closed) dis. (disabled)	

Turn-on delay					Conformity Range		Possible Range	
ID				Default	Min	Max	Min	Max
.102	Ton delay	Turn on time	s	60	0	60	0	1800

Password					
ID			Default	Min	Max
.106	PW1	1st digit of Password	0	0	9
.107	PW2	2nd digit of Password	0	0	9
.108	PW3	3rd digit of Password	0	0	9
.109	PW4	4th digit of Password	0	0	9
Remark:		If all 4 digits of the Password are 0 (default setting) the Password request is skipped			

Errorlogic signalled (shown) on output relay R3. On = it is possible to detect this error Off = it is not possible to show this error on relay R3	
Overvoltage LL (UΔ)	off
Undervoltage LL (UΔ)	off
Overvoltage LN (UY)	off
Undervoltage LN (UY)	off
10-min overvoltage ($\bar{U}$)	off
Overfrequency (f)	off
Underfrequency (f)	off
RoCoF (Rate of Change of Frequency) (Δf)	off
Phase shift (ΔΦ)	off
Remote shutdown / self-test (R)	off
Contactor feedback contact reports closed, although it should be open (C)	off
Contactor feedback contact reports open, although it should be closed (no error, only info) (c)	off

Device Information		
ID		
.105	ID: xxxxxxxxxx SW: aa.dd.ccb	xxxxxxxxxx = Device ID dd: Software version of Display Software aa: Software version of Measuring Software

		cc: Index of Configuration set b: Version of Configuration set

10.25 CEI 0-21:2019 [ID 102]

Connection Mode			Conformity Range	Possible Range
ID		Default		
.003	Connection	4-wire (LN)	2-wire, 3-wire, 4-wire (LN)	2-wire, 3-wire, 4-wire (LN), 4-wire (LN+LL)

Nominal Voltage					Conformity Range		Possible Range	
ID				Default	Min	Max	Min	Max
.005	ULN/LL nom	Unom Y Unom Δ	V V	Fixed to 230.0 / 400.0				

Functional Safety			Conformity Range	Possible Range
ID		Default		
.007	Errtol	Fixed to 1ch		
Remark:		1ch means: 1 channel without functional safety and 1 auxilliary contact1 necessary		

Operational Mode			Conformity Range	Possible Range
ID		Default		
.009	Mode	1 (transitory)	0 (definitive), 1 (transitory)	0 (definitive), 1 (transitory)

Overvoltage1 Line to Line					Conformity Range		Possible Range	
ID				Default	Min	Max	Min	Max
.011	V 59.S2 LL	U_{THR} OFF	%Unom	115	100	130	100	135
		U_{THR} ON	%Unom	Fixed Hysteresis (4% U_{THR})				
.013	T 59.S2 LL	Time OFF	ms	200	50	1000	50	10000
Only active for:		Connection Modes: 3-wire, 4-wire (LN+LL)						

Undervoltage1 Line to Line					Conformity Range		Possible Range	
ID				Default	Min	Max	Min	Max
.015	V 27.S1 LL	U_{THR} OFF	% Unom	85	20	100	0	100
		U_{THR} ON	%Unom	Fixed Hysteresis (4% U_{THR})				

.017	T 27.S1 LL	Time OFF	ms	1500	50	5000	50	10000
Only active for:		Connection Modes: 3-wire, 4-wire (LN+LL)						

Overvoltage1 Line to Neutral					Conformity Range		Possible Range	
ID				Default	Min	Max	Min	Max
.019	V 59.S2 LN	UTHR OFF	%Unom	115	100	130	100	135
		UTHR ON	%Unom	Fixed Hysteresis (4% UTHR)				
.021	T 59.S2 LN	Time OFF	ms	200	50	1000	50	10000
Only active for:		Connection Modes: 2-wire, 4-wire (LN), 4-wire (LN+LL)						

Undervoltage1 Line to Neutral					Conformity Range		Possible Range	
ID				Default	Min	Max	Min	Max
.023	V 27.S1 LN	UTHR OFF	%Unom	85	20	100	0	100
		UTHR ON	%Unom	Fixed Hysteresis (4% UTHR)				
.025	T 27.S1 LN	Time OFF	ms	1500	50	5000	50	10000
Only active for:		Connection Modes: 2-wire, 4-wire (LN), 4-wire (LN+LL))						

Undervoltage2 Line to Line					Conformity Range		Possible Range	
ID				Default	Min	Max	Min	Max
.031	V 27.S2 LL	UTHR OFF	%Unom	15	5	100	0	100
		UTHR ON	%Unom	Fixed Hysteresis (4% UTHR)				
.033	T 27.S2 LL	Time OFF	ms	200	50	5000	50	10000
Only active for:		Connection Modes: 3-wire, 4-wire (LN+LL)						

Undervoltage2 Line to Neutral					Conformity Range		Possible Range	
ID				Default	Min	Max	Min	Max
.039	V 27.S2 LN	UTHR OFF	%Unom	15	5	100	0	100
		UTHR ON	%Unom	Fixed Hysteresis (4% UTHR)				
.041	T 27.S2 LN	Time OFF	ms	200	50	5000	50	10000
Only active for:		Connection Modes: 2-wire, 4-wire (LN), 4-wire (LN+LL)						

10 minutes average overvoltage					Conformity Range		Possible Range	
ID				Default	Min	Max	Min	Max
.043	V 59.S1	U_{THR} OFF	%Unom	110	100	120	100	135
		U_{THR} ON	%Unom	Fixed Hysteresis (4% U_{THR})				
.045	T 59.S1	Time OFF	ms	0	0	0	0	10000

Overfrequency1					Conformity Range		Possible Range	
ID				Default	Min	Max	Min	Max
.055	F 81>S2 ws	f_{THR} OFF	Hz	51.50	50.00	52.00	50.00	55.00
		f_{THR} ON	Hz	Fixed Hysteresis (0.2% f_{THR})				
.057	T 81>S2 ws	Time OFF	ms	1000	50	5000	50	10000
Only active for:		Operational Mode 0 (definitive mode) when DigIn4 is inactive (contact open) Voltage > 20% U_{NOM}						

Underfrequency1					Conformity Range		Possible Range	
ID				Default	Min	Max	Min	Max
.059	F 81<S2 ws	f_{THR} OFF	Hz	47.50	47.00	50.00	45.00	50.00
		f_{THR} ON	Hz	Fixed Hysteresis (0.2% f_{THR})				
.061	T 81<S2 ws	Time OFF	ms	4000	50	5000	50	10000
Only active for:		Operational Mode 0 (definitive mode) when DigIn4 is inactive (contact open) Voltage > 20% U_{NOM}						

Overfrequency2					Conformity Range		Possible Range	
ID				Default	Min	Max	Min	Max
.063	F 81>S1 nf	f_{THR} OFF	Hz	50.20	50.00	52.00	50.00	55.00
		f_{THR} ON	Hz	Fixed Hysteresis (0.2% f_{THR})				
.065	T 81>S1 nf	Time OFF	ms	100	50	5000	50	10000
Only active for:		Operational Mode 0 (definitive mode) when DigIn4 is active (contact closed) Operational Mode 1 (transitory mode) when DigIn5 is active (contact closed)						

	Voltage > 20% U_{NOM}

Underfrequency2					Conformity Range		Possible Range	
ID				Default	Min	Max	Min	Max
.067	F 81<S1 nf	f_{THR} OFF	Hz	49.80	47.00	50.00	45.00	50.00
		f_{THR} ON	Hz	Fixed Hysteresis (0.2% f_{THR})				
.069	T 81<S1 nf	Time OFF	ms	100	50	5000	50	10000
Only active for:		Operational Mode 0 (definitive mode) when DigIn4 is active (contact closed) Operational Mode 1 (transitory mode) when DigIn5 is active (contact closed) Voltage > 20% U_{NOM}						

Overfrequency3					Conformity Range		Possible Range	
ID				Default	Min	Max	Min	Max
.071	F 81>S2 wf	f_{THR} OFF	Hz	51.50	50.00	52.00	50.00	55.00
		f_{THR} ON	Hz	Fixed Hysteresis (0.2% f_{THR})				
.073	T 81>S2 wf	Time OFF	ms	100	50	5000	50	10000
Only active for:		Operational Mode 1 (transitory mode) when DigIn5 is inactive (contact open) Voltage > 20% U_{NOM}						

Underfrequency3					Conformity Range		Possible Range	
ID				Default	Min	Max	Min	Max
.075	F 81<S2 wf	f_{THR} OFF	Hz	47.50	47.00	50.00	45.00	50.00
		f_{THR} ON	Hz	Fixed Hysteresis (0.2% f_{THR})				
.077	T 81<S2 wf	Time OFF	ms	100	50	5000	50	10000
Only active for:		Operational Mode 1 (transitory mode) when DigIn5 is inactive (contact open) Voltage > 20% U_{NOM}						

Frequency measuring in general					Conformity Range		Possible Range	
ID				Default	Min	Max	Min	Max
.113	F wnd	Window length	ms	Fixed window length 100ms				

Rate of Change of Frequency (RoCoF)					Conformity Range		Possible Range	
ID				Default	Min	Max	Min	Max
.090	RoCoF	Enable Function		off	on / off		on / off	
.091	RoCoF OFF	$\text{RoCoF}_{\text{THR}}$ OFF	mHz/s	2700	1000	4000	100	8000
.092	RoCoF ON	$\text{RoCoF}_{\text{THR}}$ ON	mHz/s	2300	1000	4000	100	8000
.093	T RoCoF	Time OFF	ms	0	0	1000	0	10000
.111	RoCoF wnd	Window length	ms	100	100	1000	100	1000

Auxiliary Contact type					Conformity Range		Possible Range	
ID				Default	Min	Max	Min	Max
.099	Contact	Type		n.c. (normally closed)	n.o. (normally opened) n.c. (normally closed)		n.o. (normally opened) n.c. (normally closed) dis. (disabled)	
.100	T Contact	Time OFF	ms	Fixed to 500ms				
.114	I3 STOP	Type		n.o. (normally opened)	n.o. (normally opened)		n.o. (normally opened) n.c. (normally closed) dis. (disabled)	

Turn-on delay					Conformity Range		Possible Range	
ID				Default	Min	Max	Min	Max
.102	Ton delay	Turn on time	s	5	0	300	0	900

Password					
ID			Default	Min	Max
.106	PW1	1st digit of Password	0	0	9
.107	PW2	2nd digit of Password	0	0	9
.108	PW3	3rd digit of Password	0	0	9
.109	PW4	4th digit of Password	0	0	9
Remark:		If all 4 digits of the Password are 0 (default setting) the Password request is skipped			

Errorlogic signalled (shown) on output relay R3. On = it is possible to detect this error Off = it is not possible to show this error on relay R3	
Overvoltage LL (UΔ)	off
Undervoltage LL (UΔ)	off
Overvoltage LN (UY)	off
Undervoltage LN (UY)	off
10-min overvoltage (Ū)	off
Overfrequency (f)	off
Underfrequency (f)	off
RoCoF (Rate of Change of Frequency) (Δf)	off
Phase shift (ΔΦ)	off
Remote shutdown / self-test (R)	off
Contactor feedback contact reports closed, although it should be open (C)	on
Contactor feedback contact reports open, although it should be closed (no error, only info) (c)	off

Device Information		
ID		
.105	ID: xxxxxxxxxx SW: aa.dd.ccb	xxxxxxxxxx = Device ID dd: Software version of Display Software aa: Software version of Measuring Software cc: Index of Configuration set b: Version of Configuration set

10.26 G99/1/3:2018 LV [ID 410]

Connection Mode			Conformity Range	Possible Range
ID		Default		
.003	Connection	Fixed to 4-wire (LN)		

Nominal Voltage					Conformity Range		Possible Range	
ID				Default	Min	Max	Min	Max
.005	ULN/LL nom	Unom Y	V	230.0	230.0	240.0	100.0	240.0
		Unom Δ	V	400.0	400.0	417.4	173.9	417.4

Functional Safety			Conformity Range	Possible Range
ID		Default		
.007	Errtol	Fixed to 1ch		
Remark:		1ch means: 1 channel without functional safety and 1 auxilliary contact1 necessary		

Overvoltage1 Line to Neutral					Conformity Range		Possible Range	
ID				Default	Min	Max	Min	Max
.019	O/V st 1	U_{THR} OFF	%Unom	114	114	114	100	135
		U_{THR} ON	%Unom	Fixed Hysteresis (0.75% U_{NOM})				
.021	T O/V st 1	Time OFF	ms	1000	1000	1000	50	300000

Overvoltage2 Line to Neutral					Conformity Range		Possible Range	
ID				Default	Min	Max	Min	Max
.035	O/V st 2	U_{THR} OFF	%Unom	119	119	119	100	135
		U_{THR} ON	%Unom	Fixed Hysteresis (0.75% U_{NOM})				
.037	T O/V st 2	Time OFF	ms	500	500	500	50	300000

Undervoltage2 Line to Neutral					Conformity Range		Possible Range	
ID				Default	Min	Max	Min	Max
.039	U/V	U_{THR} OFF	%Unom	80	80	80	0	100
		U_{THR} ON	%Unom	Fixed Hysteresis (0.75% U_{NOM})				

.041	T U/V	Time OFF	ms	2500	2500	2500	50	300000

Underfrequency1					Conformity Range		Possible Range	
ID				Default	Min	Max	Min	Max
.059	U/F st 1	f_{THR} OFF	Hz	47.50	47.50	47.50	40.00	50.00
		f_{THR} ON	Hz	Fixed Hysteresis (0.05 Hz)				
.061	T U/F st 1	Time OFF	ms	20000	20000	20000	1000	300000

Overfrequency2					Conformity Range		Possible Range	
ID				Default	Min	Max	Min	Max
.063	O/F	f_{THR} OFF	Hz	52.00	52.00	52.00	50.00	55.00
		f_{THR} ON	Hz	Fixed Hysteresis (0.05 Hz)				
.065	T O/F	Time OFF	ms	500	500	500	50	300000

Underfrequency2					Conformity Range		Possible Range	
ID				Default	Min	Max	Min	Max
.067	U/F st 2	f_{THR} OFF	Hz	47.00	47.00	47.00	40.00	50.00
		f_{THR} ON	Hz	Fixed Hysteresis (0.05 Hz)				
.069	T U/F st 2	Time OFF	ms	500	500	500	50	300000

Frequency measuring in general					Conformity Range		Possible Range	
ID				Default	Min	Max	Min	Max
.113	F wnd	Window length	ms	Fixed window length 100ms				

Rate of Change of Frequency (RoCoF)					Conformity Range		Possible Range	
ID				Default	Min	Max	Min	Max
.090	RoCoF	Enable Function		on	on / off		on / off	
.091	RoCoF off	$RoCoF_{THR}$ OFF	mHz/s	1000	10	3000	10	3000
.092	RoCoF on	$RoCoF_{THR}$ ON	mHz/s	950	10	3000	10	3000
.093	RoCoFDelay	Time OFF	ms	500	50	500	50	2000
.111	RoCoF wnd	Window length	ms	Fixed window length 225ms				

Phase Shift (PShift)					Conformity Range		Possible Range	
ID				Default	Min	Max	Min	Max
.094	PShift	Enable Function		off	on / off		on / off	
.095	PShift off	PShift $_{THR}$ OFF	°	12	--	--	3	15
.096	PShift on	PShift $_{THR}$ ON	°	9	--	--	3	15
		Time OFF	ms	Fixed to fastest possible disconnection				
.112	PShift wnd	Window length	ms	Fixed window length 200ms				

Auxiliary Contact type				Conformity Range		Possible Range	
ID			Default	Min	Max	Min	Max
.099	Contact	Type	dis. (disabled)	n.o. (normally opened) n.c. (normally closed) dis. (disabled)		n.o. (normally opened) n.c. (normally closed) dis. (disabled)	
.100	T Contact	Time OFF	ms	Fixed to 500ms			
.114	I3 STOP	Type	n.o. (normally opened)	n.o. (normally opened) n.c. (normally closed) dis. (disabled)		n.o. (normally opened) n.c. (normally closed) dis. (disabled)	

Turn-on delay					Conformity Range		Possible Range	
ID				Default	Min	Max	Min	Max
.102	Ton delay	Turn on time	s	20	20	20	0	900

Password					
ID			Default	Min	Max
.106	PW1	1st digit of Password	0	0	9
.107	PW2	2nd digit of Password	0	0	9
.108	PW3	3rd digit of Password	0	0	9
.109	PW4	4th digit of Password	0	0	9

Remark:	If all 4 digits of the Password are 0 (default setting) the Password request is skipped

Errorlogic signalled (shown) on output relay R3. On = it is possible to detect this error Off = it is not possible to show this error on relay R3	
Overvoltage LL (UΔ)	on
Undervoltage LL (UΔ)	on
Overvoltage LN (UY)	on
Undervoltage LN (UY)	on
10-min overvoltage (Ū)	on
Overfrequency (f)	on
Underfrequency (f)	on
RoCoF (Rate of Change of Frequency) (Δf)	on
Phase shift (ΔΦ)	on
Remote shutdown / self-test (R)	off
Contactor feedback contact reports closed, although it should be open (C)	on
Contactor feedback contact reports open, although it should be closed (no error, only info) (c)	on

Device Information		
ID		
.105	ID: xxxxxxxxxx SW: aa.dd.ccb	xxxxxxxxxx = Device ID dd: Software version of Display Software aa: Software version of Measuring Software cc: Index of Configuration set b: Version of Configuration set

10.27 G99/1/3:2018 HV [ID 460]

Connection Mode			Conformity Range	Possible Range
ID		Default		
.003	Connection	Fixed to 3-wire		

Nominal Voltage					Conformity Range		Possible Range	
ID				Default	Min	Max	Min	Max
.005	ULN/LL nom	Unom Y	V	230.0	57.5	230.0	28.8	241.4
		Unom Δ	V	400.0	100.0	400	50.0	420.0

Functional Safety			Conformity Range	Possible Range
ID		Default		
.007	Errtol	Fixed to 1ch		
Remark:		1ch means: 1 channel without functional safety and 1 auxilliary contact1 necessary		

Overvoltage1 Line to Line					Conformity Range		Possible Range	
ID				Default	Min	Max	Min	Max
.011	O/V st 1	UTHR OFF	%Unom	110	110	110	100	135
		UTHR ON	%Unom	Fixed Hysteresis (0.75% UNOM)				
.013	T O/V st 1	Time OFF	ms	1000	1000	1000	50	300000

Overvoltage2 Line to Line					Conformity Range		Possible Range	
ID				Default	Min	Max	Min	Max
.027	O/V st 2	UTHR OFF	%Unom	113	113	113	100	135
		UTHR ON	%Unom	Fixed Hysteresis (0.75% UNOM)				
.029	T O/V st 2	Time OFF	ms	500	500	500	50	300000

Undervoltage2 Line to Line					Conformity Range		Possible Range	
ID				Default	Min	Max	Min	Max
.031	U/V	UTHR OFF	%Unom	80	80	80	0	100
		UTHR ON	%Unom	Fixed Hysteresis (0.75% UNOM)				

.033	T U/V	Time OFF	ms	2500	2500	2500	50	300000

Underfrequency1					Conformity Range		Possible Range	
ID				Default	Min	Max	Min	Max
.059	U/F st 1	f_{THR} OFF	Hz	47.50	47.50	47.50	40.00	50.00
		f_{THR} ON	Hz	Fixed Hysteresis (0.05 Hz)				
.061	T U/F st 1	Time OFF	ms	20000	20000	20000	1000	300000

Overfrequency2					Conformity Range		Possible Range	
ID				Default	Min	Max	Min	Max
.063	O/F	f_{THR} OFF	Hz	52.00	52.00	52.00	50.00	55.00
		f_{THR} ON	Hz	Fixed Hysteresis (0.05 Hz)				
.065	T O/F	Time OFF	ms	500	500	500	50	300000

Underfrequency2					Conformity Range		Possible Range	
ID				Default	Min	Max	Min	Max
.067	U/F st 2	f_{THR} OFF	Hz	47.00	47.00	47.00	40.00	50.00
		f_{THR} ON	Hz	Fixed Hysteresis (0.05 Hz)				
.069	T U/F st 2	Time OFF	ms	500	500	500	50	300000

Frequency measuring in general					Conformity Range		Possible Range	
ID				Default	Min	Max	Min	Max
.113	F wnd	Window length	ms	Fixed window length 100ms				

Rate of Change of Frequency (RoCoF)					Conformity Range		Possible Range	
ID				Default	Min	Max	Min	Max
.090	RoCoF	Enable Function		on	on / off		on / off	
.091	RoCoF off	RoCoF$_{THR}$ OFF	mHz/s	1000	10	3000	10	3000
.092	RoCoF on	RoCoF$_{THR}$ ON	mHz/s	950	10	3000	10	3000
.093	RoCoFDelay	Time OFF	ms	500	50	500	50	2000
.111	RoCoF wnd	Window length	ms	Fixed window length 225ms				

Phase Shift (PShift)					Conformity Range		Possible Range	
ID				Default	Min	Max	Min	Max
.094	PShift	Enable Function		off	on / off		on / off	
.095	PShift off	PShift$_{THR}$ OFF	°	12	--	--	3	15
.096	PShift on	PShift$_{THR}$ ON	°	9	--	--	3	15
		Time OFF	ms	Fixed to fastest possible disconnection				
.112	PShift wnd	Window length	ms	Fixed window length 200ms				

Auxiliary Contact type					Conformity Range		Possible Range	
ID				Default	Min	Max	Min	Max
.099	Contact	Type	dis. (disabled)		n.o. (normally opened) n.c. (normally closed) dis. (disabled)		n.o. (normally opened) n.c. (normally closed) dis. (disabled)	
.100	T Contact	Time OFF	ms	Fixed to 500ms				
.114	I3 STOP	Type	n.o. (normally opened)		n.o. (normally opened) n.c. (normally closed) dis. (disabled)		n.o. (normally opened) n.c. (normally closed) dis. (disabled)	
.100	T Contact	Time OFF	ms	Fixed to 500ms				

Turn-on delay					Conformity Range		Possible Range	
ID				Default	Min	Max	Min	Max
.102	Ton delay	Turn on time	s	20	20	20	0	900

Password					
ID			Default	Min	Max
.106	PW1	1st digit of Password	0	0	9
.107	PW2	2nd digit of Password	0	0	9
.108	PW3	3rd digit of Password	0	0	9

.109	PW4	4th digit of Password	0	0	9
Remark:		If all 4 digits of the Password are 0 (default setting) the Password request is skipped			

Errorlogic signalled (shown) on output relay R3. On = it is possible to detect this error Off = it is not possible to show this error on relay R3	
Overvoltage LL (UΔ)	on
Undervoltage LL (UΔ)	on
Overvoltage LN (UY)	on
Undervoltage LN (UY)	on
10-min overvoltage (Ū)	on
Overfrequency (f)	on
Underfrequency (f)	on
RoCoF (Rate of Change of Frequency) (Δf)	on
Phase shift (ΔΦ)	on
Remote shutdown / self-test (R)	off
Contactor feedback contact reports closed, although it should be open (C)	on
Contactor feedback contact reports open, although it should be closed (no error, only info) (c)	on

Device Information		
ID		
.105	ID: xxxxxxxxxx SW: aa.dd.ccb	xxxxxxxxxx = Device ID dd: Software version of Display Software aa: Software version of Measuring Software cc: Index of Configuration set b: Version of Configuration set

10.28 G98/1/2:2018 [ID 510]

Connection Mode			Conformity Range	Possible Range
ID		Default		
.003	Connection	Fixed to 4-wire (LN)		

Nominal Voltage					Conformity Range		Possible Range	
ID				Default	Min	Max	Min	Max
.005	ULN/LL nom	Unom Y	V	230.0	230.0	240.0	100.0	240.0
		Unom Δ	V	400.0	400.0	417.4	173.9	417.4

Functional Safety			Conformity Range	Possible Range
ID		Default		
.007	Errtol	Fixed to 1ch		
Remark:		1ch means: 1 channel without functional safety and 1 auxilliary contact1 necessary		

Overvoltage1 Line to Neutral					Conformity Range		Possible Range	
ID				Default	Min	Max	Min	Max
.019	O/V st 1	UTHR OFF	%Unom	114	114	114	100	135
		UTHR ON	%Unom	Fixed Hysteresis (0.75% UNOM)				
.021	T O/V st 1	Time OFF	ms	1000	1000	1000	50	10000

Overvoltage2 Line to Neutral					Conformity Range		Possible Range	
ID				Default	Min	Max	Min	Max
.035	O/V st 2	UTHR OFF	%Unom	119	119	119	100	135
		UTHR ON	%Unom	Fixed Hysteresis (0.75% UNOM)				
.037	T O/V st 2	Time OFF	ms	500	500	500	50	10000

Undervoltage2 Line to Neutral					Conformity Range		Possible Range	
ID				Default	Min	Max	Min	Max
.039	U/V	UTHR OFF	%Unom	80	80	80	0	100
		UTHR ON	%Unom	Fixed Hysteresis (0.75% UNOM)				

.041	T U/V	Time OFF	ms	2500	2500	2500	50	10000

Underfrequency1					Conformity Range		Possible Range	
ID				Default	Min	Max	Min	Max
.059	U/F st 1	f_{THR} OFF	Hz	47.50	47.50	47.50	40.00	50.00
		f_{THR} ON	Hz	Fixed Hysteresis (0.05 Hz)				
.061	T U/F st 1	Time OFF	ms	20000	20000	20000	1000	120000

Overfrequency2					Conformity Range		Possible Range	
ID				Default	Min	Max	Min	Max
.063	O/F	f_{THR} OFF	Hz	52.00	52.00	52.00	50.00	55.00
		f_{THR} ON	Hz	Fixed Hysteresis (0.05 Hz)				
.065	T O/F	Time OFF	ms	500	500	500	50	10000

Underfrequency2					Conformity Range		Possible Range	
ID				Default	Min	Max	Min	Max
.067	U/F st 2	f_{THR} OFF	Hz	47.00	47.00	47.00	40.00	50.00
		f_{THR} ON	Hz	Fixed Hysteresis (0.05 Hz)				
.069	T U/F st 2	Time OFF	ms	500	500	500	50	10000

Frequency measuring in general					Conformity Range		Possible Range	
ID				Default	Min	Max	Min	Max
.113	F wnd	Window length	ms	Fixed window length 100ms				

Rate of Change of Frequency (RoCoF)					Conformity Range		Possible Range	
ID				Default	Min	Max	Min	Max
.090	RoCoF	Enable Function		on	on / off		on / off	
.091	RoCoF off	$RoCoF_{THR}$ OFF	mHz/s	1000	10	3000	10	3000
.092	RoCoF on	$RoCoF_{THR}$ ON	mHz/s	950	10	3000	10	3000
		Time OFF	ms	Fixed to fastest possible disconnection				
.111	RoCoF wnd	Window length	ms	Fixed window length 535ms				

Phase Shift (PShift)					Conformity Range		Possible Range	
ID				Default	Min	Max	Min	Max
.094	PShift	Enable Function		off	on / off		on / off	
.095	PShift off	PShift$_{THR}$ OFF	°	12	--	--	3	15
.096	PShift on	PShift$_{THR}$ ON	°	9	--	--	3	15
		Time OFF	ms	Fixed to the fastest possible disconnection				
.112	PShift wnd	Window length	ms	Fixed window length 200ms				

Auxiliary Contact type				Conformity Range		Possible Range	
ID			Default	Min	Max	Min	Max
.099	Contact	Type	dis. (disabled)	n.o. (normally opened) n.c. (normally closed) dis. (disabled)		n.o. (normally opened) n.c. (normally closed) dis. (disabled)	
.100	T Contact	Time OFF	ms	Fixed to 500ms			
.114	I3 STOP	Type	n.o. (normally opened)	n.o. (normally opened) n.c. (normally closed) dis. (disabled)		n.o. (normally opened) n.c. (normally closed) dis. (disabled)	

Turn-on delay					Conformity Range		Possible Range	
ID				Default	Min	Max	Min	Max
.102	Ton delay	Turn on time	s	20	20	20	0	900

Password					
ID			Default	Min	Max
.106	PW1	1st digit of Password	0	0	9
.107	PW2	2nd digit of Password	0	0	9
.108	PW3	3rd digit of Password	0	0	9
.109	PW4	4th digit of Password	0	0	9
Remark:		If all 4 digits of the Password are 0 (default setting) the Password request is skipped			

Errorlogic signalled (shown) on output relay R3. On = it is possible to detect this error Off = it is not possible to show this error on relay R3	
Overvoltage LL (UΔ)	off
Undervoltage LL (UΔ)	off
Overvoltage LN (UY)	off
Undervoltage LN (UY)	off
10-min overvoltage (Ū)	off
Overfrequency (f)	off
Underfrequency (f)	off
RoCoF (Rate of Change of Frequency) (Δf)	off
Phase shift (ΔΦ)	off
Remote shutdown / self-test (R)	off
Contactor feedback contact reports closed, although it should be open (C)	off
Contactor feedback contact reports open, although it should be closed (no error, only info) (c)	off

Device Information		
ID		
.105	ID: xxxxxxxxxx	xxxxxxxxxx = Device ID
	SW: aa.dd.ccb	dd: Software version of Display Software aa: Software version of Measuring Software cc: Index of Configuration set b: Version of Configuration set

10.29 C10-11:2021 LV-IP [ID 603] Interface Protection low voltage

Connection Mode			Conformity Range	Possible Range
ID		Default		
.003	Connection	4-wire (LN+LL)	4-wire (LN+LL)	2-wire, 3-wire, 4-wire (LN), 4-wire (LN+LL)

Nominal Voltage					Conformity Range		Possible Range	
ID				Default	Min	Max	Min	Max
.005	ULN/LL nom	Unom Y	V	230.0	230.0	240.0	100.0	240.0
		Unom Δ	V	400.0	400.0	417.4	173.9	417.4

Functional Safety			Conformity Range	Possible Range
ID		Default		
.007	Errtol	Fixed to 1ch		
Remark:		1ch means: 1 channel without functional safety and 1 auxilliary contact necessary		

Overvoltage1 Line to Neutral					Conformity Range		Possible Range	
ID				Default	Min	Max	Min	Max
.019	U LN > off	UTHR OFF	%Unom	110	100	110	100	135
.020	U LN > on	UTHR ON	%Unom	109	100	120	100	135
.021	T U LN >	Time OFF	ms	1000	0	3000	0	10000
Comment:		U LN > off has a fixed offset of 0.25% UNOM subtracted from the displayed value						
Only active for:		Connection Modes: 2-wire, 4-wire (LN), 4-wire (LN+LL)						

Undervoltage1 Line to Neutral					Conformity Range		Possible Range	
ID				Default	Min	Max	Min	Max
.023	U LN < off	UTHR OFF	%Unom	70	50	85	0	100
.024	U LN < on	UTHR ON	%Unom	85	50	100	0	100
.025	T U LN <	Time OFF	ms	1500	0	1500	0	10000
Comment:		U LN < off has a fixed offset of 0.25% UNOM added to the displayed value						
Only active for:		Connection Modes: 2-wire, 4-wire (LN), 4-wire (LN+LL))						

Overvoltage2 Line to Neutral					Conformity Range		Possible Range	
ID				Default	Min	Max	Min	Max
.035	U LN>> off	U_{THR} OFF	%Unom	115	110	130	100	135
.036	U LN>> on	U_{THR} ON	%Unom	114	100	120	100	135
.037	T ULN>>	Time OFF	ms	0	0	0	0	10000
		Time OFF	ms	Fixed to fastest possible disconnection				
Comment:		U LN > off has a fixed offset of 0.25% U_{NOM} subtracted from the displayed value						
Only active for:		Connection Modes: 2-wire, 4-wire (LN), 4-wire (LN+LL)						

Undervoltage2 Line to Neutral					Conformity Range		Possible Range	
ID				Default	Min	Max	Min	Max
.039	U LN<< off	U_{THR} OFF	%Unom	15	15	50	0	100
.040	U LN<< on	U_{THR} ON	%Unom	85	50	100	0	100
.041	T U LN<<	Time OFF	ms	250	0	5000	0	10000
Comment:		U LN < off has a fixed offset of 0.25% U_{NOM} added to the displayed value						
Only active for:		Connection Modes: 2-wire, 4-wire (LN), 4-wire (LN+LL)						

Zero Voltage Line to Neutral					Conformity Range		Possible Range	
ID				Default	Min	Max	Min	Max
.115	Uzero >	Enable Function		on	on		on/off	
.116	Uzero> off	U_{THR} OFF	%Unom	20	20	20	5	100
.117	Uzero> on	U_{THR} ON	%Unom	15	1	19	1	100
.118	T Uzero >	Time OFF	ms	1500	0	1500	0	10000
Only active for:		Connection Modes: 4-wire (LN+LL)						

Residual Voltage (3 x Zero Voltage) Line to Neutral Activation of a narrower frequency window					Conformity Range		Possible Range	
ID				Default	Min	Max	Min	Max
.119	Ures-anfw>	Enable Function		on	on		on/off	
.120	Ures > on	U_{THR} OFF	%Unom	5	5	5	2	100
.121	Ures > off	U_{THR} ON	%Unom	3	1	3	1	100

.122	T Ures >	Time OFF	ms	200	0	240000	0	240000
Only active for:		Connection Modes: 4-wire (LN+LL)						

Undervoltage Line to Neutral Activation of a narrower frequency window					Conformity Range		Possible Range	
ID				Default	Min	Max	Min	Max
.123	Uanfw <	Enable Function		on	on		on/off	
.124	Uanfw< on	UTHR OFF	%Unom	85	85	85	1	100
.125	Uanfw< off	UTHR ON	%Unom	86	86	100	2	100
.126	T Uanfw <	Time OFF	ms	0	0	240000	0	240000
Only active for:		Connection Modes: 4-wire (LN+LL)						

Overfrequency1					Conformity Range		Possible Range	
ID				Default	Min	Max	Min	Max
.055	f > off	fTHR OFF	Hz	51.50	51.50	51.50	50.00	55.00
.056	f > on	fTHR ON	Hz	50.10	50.00	52.00	50.00	55.00
.057	T f >	Time OFF	ms	0	0	0	0	10000
Comment:		f > off has a fixed offset of 0.01 Hz subtracted to the displayed value						
Only active for:		Voltage > 20% UNOM						

Underfrequency1					Conformity Range		Possible Range	
ID				Default	Min	Max	Min	Max
.059	f < off	fTHR OFF	Hz	47.50	47.50	47.50	40.00	50.00
.060	f < on	fTHR ON	Hz	49.90	47.00	50.00	40.00	50.00
.061	T f <	Time OFF	ms	0	0	0	0	10000
Comment:		f < off has a fixed offset of 0.01 Hz added to the displayed value						
Only active for:		Voltage > 20% UNOM						

Overfrequency nw (narrower window)			Conformity Range		Possible Range	
ID		Default	Min	Max	Min	Max

.062	f nw >	Enable Function		on	on		on/off	
.063	f nw > off	f_{THR} OFF	Hz	50.30	50.30	50.30	50.00	55.00
.064	f nw > on	f_{THR} ON	Hz	50.10	50.00	52.00	50.00	55.00
.065	T f nw >	Time OFF	ms	500	500	500	0	10000
Comment:		f nw > off has a fixed offset of 0.01 Hz subtracted to the displayed value						
Only active for:		Ures-anfw, Uanfw, Dig Input5=HIGH (local setting)						

Underfrequency nw (narrower window)					Conformity Range		Possible Range	
ID				Default	Min	Max	Min	Max
.066	f nw <	Enable Function		on	on		on/off	
.067	f nw < off	f_{THR} OFF	Hz	49.70	49.70	49.70	45.00	50.00
.068	f nw < on	f_{THR} ON	Hz	49.90	47.00	50.00	45.00	50.00
.069	T f nw <	Time OFF	ms	500	500	500	0	10000
Comment:		f nw < off has a fixed offset of 0.01 Hz added to the displayed value						
Only active for:		Ures-anfw, Uanfw, Dig Input5=HIGH (local setting)						

Frequency measuring in general					Conformity Range		Possible Range	
ID				Default	Min	Max	Min	Max
.113	F wnd	Window length	ms	Fixed window length 100ms				

Rate of Change of Frequency (RoCoF)					Conformity Range		Possible Range	
ID				Default	Min	Max	Min	Max
.090	RoCoF	Enable Function		on	on / off		on / off	
.091	RoCoF off	$RoCoF_{THR}$ OFF	mHz/s	1000	1000	2000	100	5000
.092	RoCoF on	$RoCoF_{THR}$ ON	mHz/s	800	100	2000	100	5000
.093	RoCoF t	Time OFF	ms	0	0	0	0	5000
.111	RoCoF wnd	Window length	ms	Fixed window length 100ms				

Phase Shift (PShift)			Conformity Range		Possible Range	
ID		Default	Min	Max	Min	Max

.094	PShift	Enable Function		off	on / off		on / off	
.095	PShift off	PShift$_{\text{THR}}$ OFF	°	7	7	7	3	15
.096	PShift on	PShift$_{\text{THR}}$ ON	°	5	3	7	3	15
		Time OFF	ms	Fixed to the fastest possible disconnection				
.112	PShift wnd	Window length	ms	Fixed window length 100ms				
Comment:		PShift off has a fixed offset of 1° subtracted from the displayed value						

Auxiliary Contact type					Conformity Range		Possible Range	
ID			Default		Min	Max	Min	Max
.099	Contact	Type	dis. (disabled)		n.o. (normally opened) n.c. (normally closed) dis. (disabled)		n.o. (normally opened) n.c. (normally closed) dis. (disabled)	
.100	Contact t	Time OFF	ms	300	100	300	10	5000
.114	I3 STOP	Type	n.o. (normally opened)		n.o. (normally opened) n.c. (normally closed) dis. (disabled)		n.o. (normally opened) n.c. (normally closed) dis. (disabled)	

Turn-on delay					Conformity Range		Possible Range	
ID				Default	Min	Max	Min	Max
.102	T on delay	Turn on time	s	60	60	60	0	900

Password					
ID			Default	Min	Max
.106	PW1	1st digit of Password	0	0	9
.107	PW2	2nd digit of Password	0	0	9
.108	PW3	3rd digit of Password	0	0	9
.109	PW4	4th digit of Password	0	0	9
Remark:		If all 4 digits of the Password are 0 (default setting) the Password request is skipped			

Errorlogic signalled (shown) on output relay R3. On = it is possible to detect this error Off = it is not possible to show this error on relay R3	
Overvoltage LL (UΔ)	off
Undervoltage LL (UΔ)	off
Overvoltage LN (UY)	off
Undervoltage LN (UY)	off
10-min overvoltage ($\bar{U}$)	off
Overfrequency (f)	off
Underfrequency (f)	off
RoCoF (Rate of Change of Frequency) (Δf)	off
Phase shift (ΔΦ)	off
Remote shutdown / self-test (R)	off
Contactor feedback contact reports closed, although it should be open (C)	on
Contactor feedback contact reports open, although it should be closed (no error, only info) (c)	on

Device Information		
ID		
.105	ID: xxxxxxxxxx SW: aa.dd.ccb	xxxxxxxxxx = Device ID dd: Software version of Display Software aa: Software version of Measuring Software cc: Index of Configuration set b: Version of Configuration set

10.30 C10-11:2019 LV-ASS [ID 602] Automatic Separation System / Low Voltage

Connection Mode			Conformity Range	Possible Range
ID		Default		
.003	Connection	4-wire (LN)	4-wire (LN)	2-wire, 3-wire, 4-wire (LN), 4-wire (LN+LL)

Nominal Voltage					Conformity Range		Possible Range	
ID				Default	Min	Max	Min	Max
.005	ULN/LL nom	Unom Y Unom Δ	V V	230.0 400.0	230.0 400.0	240.0 417.4	100.0 173.9	240.0 417.4

Functional Safety			Conformity Range	Possible Range
ID		Default		
.007	Errtol	Fixed to 1ch		
Remark:		1ch means: 1 channel without functional safety and 1 auxilliary contact1 necessary		

Overvoltage1 Line to Neutral					Conformity Range		Possible Range	
ID				Default	Min	Max	Min	Max
.019	U LN > off	UTHR OFF	%Unom	115	100	120	100	135
.020	U LN > on	UTHR ON	%Unom	109	100	120	100	135
.021	T U LN >	Time OFF	ms	100	100	100000	100	100000
Comment:		U LN > off has a fixed offset of 0.25% UNOM subtracted from the displayed value						
Only active for:		Connection Modes: 2-wire, 4-wire (LN), 4-wire (LN+LL)						

Undervoltage1 Line to Neutral					Conformity Range		Possible Range	
ID				Default	Min	Max	Min	Max
.023	U LN < off	UTHR OFF	%Unom	80	20	100	0	100
.024	U LN < on	UTHR ON	%Unom	85	50	100	0	100
.025	T U LN <	Time OFF	ms	100	100	100000	100	100000
Comment:		U LN < off has a fixed offset of 0.25% UNOM added to the displayed value						
Only active for:		Connection Modes: 2-wire, 4-wire (LN), 4-wire (LN+LL))						

10 minutes average overvoltage					Conformity Range		Possible Range	
ID				Default	Min	Max	Min	Max
.042	Uavg	Enable function		on	on		on /off	
.043	Uavg off	U_{THR} OFF	%Unom	110	100	115	100	135
		U_{THR} ON	%Unom	Fixed Hysteresis (1% U_{NOM})				
		Time OFF	ms	Fixed to fastest possible disconnection				

Overfrequency1					Conformity Range		Possible Range	
ID				Default	Min	Max	Min	Max
.055	f > off	f_{THR} OFF	Hz	51.50	50.00	52.00	50.00	55.00
.056	f > on	f_{THR} ON	Hz	50.10	50.00	52.00	50.00	55.00
		Time OFF	ms	Fixed to fastest possible disconnection				
Comment:		f > off has a fixed offset of 0.01 Hz subtracted to the displayed value						
Only active for:		Voltage > 20% U_{NOM}						

Underfrequency1					Conformity Range		Possible Range	
ID				Default	Min	Max	Min	Max
.059	f < off	f_{THR} OFF	Hz	47.50	47.00	50.00	40.00	50.00
.060	f < on	f_{THR} ON	Hz	49.90	47.00	50.00	40.00	50.00
		Time OFF	ms	Fixed to fastest possible disconnection				
Comment:		f < off has a fixed offset of 0.01 Hz added to the displayed value						
Only active for:		Voltage > 20% U_{NOM}						

Frequency measuring in general					Conformity Range		Possible Range	
ID				Default	Min	Max	Min	Max
.113	F wnd	Window length	ms	Fixed window length 100ms				

Rate of Change of Frequency (RoCoF)					Conformity Range		Possible Range	
ID				Default	Min	Max	Min	Max
.090	RoCoF	Enable Function		off	on / off		on / off	

.091	RoCoF off	$RoCoF_{THR}$ OFF	mHz/s	1000	1000	1000	100	2000
.092	RoCoF on	$RoCoF_{THR}$ ON	mHz/s	800	100	1000	100	1000
.093	RoCoF t	Time OFF	ms	0	0	0	0	1000
.111	RoCoF wnd	Window length	ms	Fixed window length 100ms				

Phase Shift (PShift)					Conformity Range		Possible Range	
ID				Default	Min	Max	Min	Max
.094	PShift	Enable Function		on	on / off		on / off	
.095	PShift off	$PShift_{THR}$ OFF	°	7	7	7	3	15
.096	PShift on	$PShift_{THR}$ ON	°	5	3	7	3	15
		Time OFF	ms	Fixed to the fastest possible disconnection				
.112	PShift wnd	Window length	ms	Fixed window length 100ms				
Comment:		PShift off has a fixed offset of 1° subtracted from the displayed value						

Auxiliary Contact type					Conformity Range		Possible Range	
ID			Default		Min	Max	Min	Max
.099	Contact	Type	dis. (disabled)		n.o. (normally opened) n.c. (normally closed) dis. (disabled)		n.o. (normally opened) n.c. (normally closed) dis. (disabled)	
.100	Contact t	Time OFF	ms	300	100	300	10	5000
.114	I3 STOP	Type	n.o. (normally opened)		n.o. (normally opened) n.c. (normally closed) dis. (disabled)		n.o. (normally opened) n.c. (normally closed) dis. (disabled)	

Turn-on delay					Conformity Range		Possible Range	
ID				Default	Min	Max	Min	Max
.102	Ton delay	Turn on time	s	60	60	60	0	900

Password	

ID			Default	Min	Max
.106	PW1	1st digit of Password	0	0	9
.107	PW2	2nd digit of Password	0	0	9
.108	PW3	3rd digit of Password	0	0	9
.109	PW4	4th digit of Password	0	0	9
Remark:		If all 4 digits of the Password are 0 (default setting) the Password request is skipped			

Errorlogic signalled (shown) on output relay R3.

On = it is possible to detect this error

Off = it is not possible to show this error on relay R3

Overvoltage LL (UΔ)	off
Undervoltage LL (UΔ)	off
Overvoltage LN (UY)	off
Undervoltage LN (UY)	off
10-min overvoltage (Ū)	off
Overfrequency (f)	off
Underfrequency (f)	off
RoCoF (Rate of Change of Frequency) (Δf)	off
Phase shift (ΔΦ)	off
Remote shutdown / self-test (R)	off
Contactor feedback contact reports closed, although it should be open (C)	on
Contactor feedback contact reports open, although it should be closed (no error, only info) (c)	on

Device Information

ID		
.105	ID: xxxxxxxxxx SW: aa.dd.ccb	xxxxxxxxxx = Device ID dd: Software version of Display Software aa: Software version of Measuring Software cc: Index of Configuration set

		b: Version of Configuration set

10.31 C10-11:2021 HV-IP [ID 653] Interface Protection / High Voltage

Connection Mode			Conformity Range	Possible Range
ID		Default		
.003	Connection	3-wire	3-wire	2-wire, 3-wire, 4-wire (LN), 4-wire (LN+LL)

Nominal Voltage					Conformity Range		Possible Range	
ID				Default	Min	Max	Min	Max
.005	ULN/LL nom	Unom Y	V	230.0	57.5	230.0	28.8	241.4
		Unom Δ	V	400.0	100.0	400.0	50.0	420.0

Functional Safety			Conformity Range	Possible Range
ID		Default		
.007	Errtol	Fixed to 1ch		
Remark:		1ch means: 1 channel without functional safety and 1 auxilliary contact necessary		

Overvoltage1 Line to Line					Conformity Range		Possible Range	
ID				Default	Min	Max	Min	Max
.011	U LL > off	U_{THR} OFF	%Unom	110	100	110	100	135
.012	U LL > on	U_{THR} ON	%Unom	109	100	120	100	135
.013	T U LL >	Time OFF	ms	1000	0	3000	0	10000
Comment:		U LL > off has a fixed offset of 0.25% U_{NOM} subtracted from the displayed value						
Only active for:		Connection Modes: 3-wire, 4-wire (LN+LL)						

Undervoltage1 Line to Line					Conformity Range		Possible Range	
ID				Default	Min	Max	Min	Max
.015	U LL < off	U_{THR} OFF	%Unom	70	50	85	0	100
.016	U LL < on	U_{THR} ON	%Unom	90	50	100	0	100
.017	T U LL <	Time OFF	ms	1500	0	1500	0	10000
Comment:		U LL < off has a fixed offset of 0.25% U_{NOM} added to the displayed value						
Only active for:		Connection Modes: 3-wire, 4-wire (LN+LL)						

Overvoltage2 Line to Line					Conformity Range		Possible Range	
ID				Default	Min	Max	Min	Max
.027	U LL>> off	U_{THR} OFF	%Unom	115	110	130	100	135
.028	U LL>> on	U_{THR} ON	%Unom	114	100	120	100	135
.029	T U LL>>	Time OFF	ms	0	0	0	0	10000
Comment:		U LL>> off has a fixed offset of 0.25% U_{NOM} subtracted from the displayed value						
Only active for:		Connection Modes: 3-wire, 4-wire (LN+LL)						

Undervoltage2 Line to Line					Conformity Range		Possible Range	
ID				Default	Min	Max	Min	Max
.031	U LL<< off	U_{THR} OFF	%Unom	15	15	50	0	100
.032	U LL<< on	U_{THR} ON	%Unom	90	50	100	0	100
.033	T U LL<<	Time OFF	ms	250	0	5000	0	10000
Comment:		U LL<< off has a fixed offset of 0.25% U_{NOM} added to the displayed value						
Only active for:		Connection Modes: 3-wire, 4-wire (LN+LL)						

Undervoltage Line to Neutral Activation of a narrower frequency window					Conformity Range		Possible Range	
ID				Default	Min	Max	Min	Max
.123	Uanfw <	Enable Function		off	on/off		on/off	
.124	Uanfw< on	U_{THR} OFF	%Unom	85	85	85	1	100
.125	Uanfw< off	U_{THR} ON	%Unom	90	86	100	2	100
.126	T Uanfw <	Time OFF	ms	0	0	240000	0	240000
Only active for:		Connection Modes: 4-wire (LN+LL)						

Overfrequency1					Conformity Range		Possible Range	
ID				Default	Min	Max	Min	Max
.055	f > off	f_{THR} OFF	Hz	51.50	51.50	51.50	50.00	55.00
.056	f > on	f_{THR} ON	Hz	50.10	50.00	52.00	50.00	55.00
.057	T f >	Time OFF	ms	0	0	0	0	10000
Comment:		f > off has a fixed offset of 0.01 Hz subtracted to the displayed value						

Only active for:	Voltage > 20% U_{NOM}

Underfrequency1					Conformity Range		Possible Range	
ID				Default	Min	Max	Min	Max
.059	f < off	f_{THR} OFF	Hz	47.50	47.50	47.50	40.00	50.00
.060	f < on	f_{THR} ON	Hz	49.90	47.00	50.00	40.00	50.00
.061	T f <	Time OFF	ms	0	0	0	0	10000
Comment:		f < off has a fixed offset of 0.01 Hz added to the displayed value						
Only active for:		Voltage > 20% U_{NOM}						

Overfrequency nw (narrower window)					Conformity Range		Possible Range	
ID				Default	Min	Max	Min	Max
.062	f nw >	Enable Function		on	on		on/off	
.063	f nw > off	f_{THR} OFF	Hz	50.30	50.30	50.30	50.00	55.00
.064	f nw > on	f_{THR} ON	Hz	50.10	50.00	52.00	50.00	55.00
.065	T f nw >	Time OFF	ms	500	500	500	0	10000
Comment:		f nw > off has a fixed offset of 0.01 Hz subtracted to the displayed value						
Only active for:		Dig Input5=HIGH (local setting)						

Underfrequency nw (narrower window)					Conformity Range		Possible Range	
ID				Default	Min	Max	Min	Max
.066	f nw <	Enable Function		on	on		on/off	
.067	f nw < off	f_{THR} OFF	Hz	49.70	49.70	49.70	45.00	50.00
.068	f nw < on	f_{THR} ON	Hz	49.90	47.00	50.00	45.00	50.00
.069	T f nw <	Time OFF	ms	500	500	500	0	10000
Comment:		f nw < off has a fixed offset of 0.01 Hz added to the displayed value						
Only active for:		Dig Input5=HIGH (local setting)						

Frequency measuring in general					Conformity Range		Possible Range	
ID				Default	Min	Max	Min	Max
.113	F wnd	Window length	ms	Fixed window length 100ms				

Rate of Change of Frequency (RoCoF)					Conformity Range		Possible Range	
ID				Default	Min	Max	Min	Max
.090	RoCoF	Enable Function		on	on / off		on / off	
.091	RoCoF off	RoCoF$_{\text{THR}}$ OFF	mHz/s	1000	1000	2000	100	5000
.092	RoCoF on	RoCoF$_{\text{THR}}$ ON	mHz/s	800	100	2000	100	5000
.093	RoCoF t	Time OFF	ms	0	0	0	0	5000
.111	RoCoF wnd	Window length	ms	Fixed window length 100ms				

Phase Shift (PShift)					Conformity Range		Possible Range	
ID				Default	Min	Max	Min	Max
.094	PShift	Enable Function		off	on / off		on / off	
.095	PShift off	PShift $_{\text{THR}}$ OFF	°	7	7	7	3	15
.096	PShift on	PShift $_{\text{THR}}$ ON	°	5	3	7	3	15
		Time OFF	ms	Fixed to the fastest possible disconnection				
.112	PShift wnd	Window length	ms	Fixed window length 100ms				
Comment:		PShift off has a fixed offset of 1° subtracted from the displayed value						

Auxiliary Contact type					Conformity Range		Possible Range	
ID			Default		Min	Max	Min	Max
.099	Contact	Type	dis. (disabled)		n.o. (normally opened) n.c. (normally closed) dis. (disabled)		n.o. (normally opened) n.c. (normally closed) dis. (disabled)	
.100	Contact t	Time OFF	ms	300	100	300	10	5000
.114	I3 STOP	Type	n.o. (normally opened)		n.o. (normally opened) n.c. (normally closed) dis. (disabled)		n.o. (normally opened) n.c. (normally closed) dis. (disabled)	

Turn-on delay			Conformity Range		Possible Range	
ID		Default	Min	Max	Min	Max

.102	T on delay	Turn on time	s	60	60	60	0	900

Password					
ID			Default	Min	Max
.106	PW1	1st digit of Password	0	0	9
.107	PW2	2nd digit of Password	0	0	9
.108	PW3	3rd digit of Password	0	0	9
.109	PW4	4th digit of Password	0	0	9
Remark:		If all 4 digits of the Password are 0 (default setting) the Password request is skipped			

Errorlogic signalled (shown) on output relay R3. On = it is possible to detect this error Off = it is not possible to show this error on relay R3	
Overvoltage LL (UΔ)	off
Undervoltage LL (UΔ)	off
Overvoltage LN (UY)	off
Undervoltage LN (UY)	off
10-min overvoltage (Ū)	off
Overfrequency (f)	off
Underfrequency (f)	off
RoCoF (Rate of Change of Frequency) (Δf)	off
Phase shift (ΔΦ)	off
Remote shutdown / self-test (R)	off
Contactor feedback contact reports closed, although it should be open (C)	on
Contactor feedback contact reports open, although it should be closed (no error, only info) (c)	on

Device Information		
ID		
.105	ID: xxxxxxxxxx SW: aa.dd.ccb	xxxxxxxxxx = Device ID dd: Software version of Display Software

		aa: Software version of Measuring Software cc: Index of Configuration set b: Version of Configuration set

10.32 C10-11:2019 HV-ASS [ID 652] Automatic Separation System / High Voltage

Connection Mode			Conformity Range	Possible Range
ID		Default		
.003	Connection	3-wire	3-wire	2-wire, 3-wire, 4-wire (LN), 4-wire (LN+LL)

Nominal Voltage					Conformity Range		Possible Range	
ID				Default	Min	Max	Min	Max
.005	ULN/LL nom	Unom Y	V	230.0	57.5	230.0	28.8	241.4
		Unom Δ	V	400.0	100.0	400.0	50.0	420.0

Functional Safety			Conformity Range	Possible Range
ID		Default		
.007	Errtol	Fixed to 1ch		
Remark:		1ch means: 1 channel without functional safety and 1 auxilliary contact1 necessary		

Overvoltage1 Line to Line					Conformity Range		Possible Range	
ID				Default	Min	Max	Min	Max
.011	U LL > off	U_{THR} OFF	%Unom	115	100	120	100	135
.012	U LL > on	U_{THR} ON	%Unom	109	100	120	100	135
.013	T U LL >	Time OFF	ms	100	100	100000	100	100000
Comment:		U LL > off has a fixed offset of 0.25% U_{NOM} subtracted from the displayed value						
Only active for:		Connection Modes: 3-wire, 4-wire (LN+LL)						

Undervoltage1 Line to Line			Conformity Range		Possible Range	
ID		Default	Min	Max	Min	Max

.015	U LL < off	UTHR OFF	%Unom	80	20	100	0	100
.016	U LL < on	UTHR ON	%Unom	90	50	100	0	100
.017	T U LL <	Time OFF	ms	100	100	100000	100	10000
Comment:		U LL < off has a fixed offset of 0.25% UNOM added to the displayed value						
Only active for:		Connection Modes: 3-wire, 4-wire (LN+LL)						

10 minutes average overvoltage					Conformity Range		Possible Range	
ID				Default	Min	Max	Min	Max
.042	Uavg	Enable function		on	on		on /off	
.043	Uavg off	UTHR OFF	%Unom	110	100	115	100	135
		UTHR ON	%Unom	Fixed Hysteresis (1% UNOM)				
		Time OFF	ms	Fixed to fastest possible disconnection				

Overfrequency1					Conformity Range		Possible Range	
ID				Default	Min	Max	Min	Max
.055	f > off	fTHR OFF	Hz	51.50	50.00	52.00	50.00	55.00
.056	f > on	fTHR ON	Hz	50.10	50.00	52.00	50.00	55.00
.057	T f >	Time OFF	ms	100	100	100000	100	100000
Comment:		f > off has a fixed offset of 0.01 Hz subtracted to the displayed value						
Only active for:		Voltage > 20% UNOM						

Underfrequency1					Conformity Range		Possible Range	
ID				Default	Min	Max	Min	Max
.059	f < off	fTHR OFF	Hz	47.50	47.00	50.00	40.00	50.00
.060	f < on	fTHR ON	Hz	49.90	47.00	50.00	40.00	50.00
.061	T f <	Time OFF	ms	100	100	100000	100	100000
Comment:		f < off has a fixed offset of 0.01 Hz added to the displayed value						
Only active for:		Voltage > 20% UNOM						

Frequency measuring in general			Conformity Range		Possible Range	
ID		Default	Min	Max	Min	Max

.113	F wnd	Window length	ms	Fixed window length 100ms

Rate of Change of Frequency (RoCoF)					Conformity Range		Possible Range	
ID				Default	Min	Max	Min	Max
.090	RoCoF	Enable Function		off	on / off		on / off	
.091	RoCoF off	RoCoF$_{THR}$ OFF	mHz/s	1000	1000	1000	100	2000
.092	RoCoF on	RoCoF$_{THR}$ ON	mHz/s	800	100	1000	100	1000
.093	RoCoF t	Time OFF	ms	0	0	0	0	1000
.111	RoCoF wnd	Window length	ms	Fixed window length 100ms				

Phase Shift (PShift)					Conformity Range		Possible Range	
ID				Default	Min	Max	Min	Max
.094	PShift	Enable Function		on	on / off		on / off	
.095	PShift off	PShift$_{THR}$ OFF	°	7	7	7	3	15
.096	PShift on	PShift$_{THR}$ ON	°	5	3	7	3	15
		Time OFF	ms	Fixed to the fastest possible disconnection				
.112	PShift wnd	Window length	ms	Fixed window length 100ms				
Comment:		PShift off has a fixed offset of 1° subtracted from the displayed value						

Auxiliary Contact type					Conformity Range		Possible Range	
ID			Default		Min	Max	Min	Max
.099	Contact	Type	dis. (disabled)		n.o. (normally opened) n.c. (normally closed) dis. (disabled)		n.o. (normally opened) n.c. (normally closed) dis. (disabled)	
.100	Contact t	Time OFF	ms	300	100	300	10	5000
.114	I3 STOP	Type	n.o. (normally opened)		n.o. (normally opened) n.c. (normally closed) dis. (disabled)		n.o. (normally opened) n.c. (normally closed) dis. (disabled)	

Turn-on delay					Conformity Range		Possible Range	
ID				Default	Min	Max	Min	Max
.102	Ton delay	Turn on time	s	60	60	60	0	900

Password					
ID			Default	Min	Max
.106	PW1	1st digit of Password	0	0	9
.107	PW2	2nd digit of Password	0	0	9
.108	PW3	3rd digit of Password	0	0	9
.109	PW4	4th digit of Password	0	0	9
Remark:		If all 4 digits of the Password are 0 (default setting) the Password request is skipped			

Errorlogic signalled (shown) on output relay R3. On = it is possible to detect this error Off = it is not possible to show this error on relay R3	
Overvoltage LL (UΔ)	off
Undervoltage LL (UΔ)	off
Overvoltage LN (UY)	off
Undervoltage LN (UY)	off
10-min overvoltage (Ū)	off
Overfrequency (f)	off
Underfrequency (f)	off
RoCoF (Rate of Change of Frequency) (Δf)	off
Phase shift (ΔΦ)	off
Remote shutdown / self-test (R)	off
Contactor feedback contact reports closed, although it should be open (C)	on
Contactor feedback contact reports open, although it should be closed (no error, only info) (c)	on

Device Information	
ID	

.105	ID: xxxxxxxxxx SW: aa.dd.ccb	xxxxxxxxxx = Device ID dd: Software version of Display Software aa: Software version of Measuring Software cc: Index of Configuration set b: Version of Configuration set

10.33 NA/EEA- CH 2014 [ID 1200] Low Voltage Type A up to 1MW

Connection Mode			Conformity Range	Possible Range
ID		Default		
.003	Connection	4-wire (LN+LL)	2-wire, 3-wire, 4-wire (LN), 4-wire (LN+LL)	2-wire, 3-wire, 4-wire (LN), 4-wire (LN+LL)

Nominal Voltage					Conformity Range		Possible Range	
ID				Default	Min	Max	Min	Max
.005	ULN/LL nom	Unom Y	V	230.0	230.0	230.0	28.8	241.4
		Unom Δ	V	400.0	400.0	400.0	50.0	420.0

Functional Safety			Conformity Range	Possible Range
ID		Default		
.007	Errtol	Fixed to 2ch		
Remark:		2ch means: 2 channel with functional safety and 2 auxilliary contacts necessary		

Overvoltage1 Line to Line					Conformity Range		Possible Range	
ID				Default	Min	Max	Min	Max
.010	ULL >	Enable function		off	on / off		on /off	
.011	ULL > off	U_{THR} OFF	%Unom	110	100	115	100	135
.012	ULL > on	U_{THR} ON	%Unom	110	100	110	100	135
.013	T ULL >	Time OFF	ms	60000	50	180000	50	180000
Only active for:		Connection Modes: 3-wire, 4-wire (LN+LL)						
Comment:		ULL > on has a fixed offset of 0.5% U_{NOM} subtracted from the displayed value						

Undervoltage1 Line to Line					Conformity Range		Possible Range	
ID				Default	Min	Max	Min	Max
.015	ULL < off	U_{THR} OFF	%Unom	80	10	100	10	100
.016	ULL < on	U_{THR} ON	%Unom	90	90	100	10	100
.017	T ULL <	Time OFF	ms	100	50	180000	50	180000
Only active for:		Connection Modes: 3-wire, 4-wire (LN+LL)						

Comment:	ULL < on has a fixed offset of 0.5% U_{NOM} added to the displayed value

Overvoltage1 Line to Neutral					Conformity Range		Possible Range	
ID				Default	Min	Max	Min	Max
.018	ULN >	Enable function		off	on / off		on /off	
.019	ULN > off	U_{THR} OFF	%Unom	110	100	115	100	135
.020	ULN > on	U_{THR} ON	%Unom	110	100	110	100	135
.021	T ULN >	Time OFF	ms	60000	50	180000	50	180000
Only active for:		Connection Modes: 2-wire, 4-wire (LN), 4-wire (LN+LL)						
Comment:		ULN > on has a fixed offset of 0.5% U_{NOM} subtracted from the displayed value						

Undervoltage1 Line to Neutral					Conformity Range		Possible Range	
ID				Default	Min	Max	Min	Max
.023	ULN < off	U_{THR} OFF	%Unom	80	10	100	10	100
.024	ULN < on	U_{THR} ON	%Unom	90	90	100	10	100
.025	T ULN <	Time OFF	ms	100	50	180000	50	180000
Only active for:		Connection Modes: 2-wire, 4-wire (LN), 4-wire (LN+LL))						
Comment:		ULN < on has a fixed offset of 0.5% U_{NOM} added to the displayed value						

Overvoltage2 Line to Line					Conformity Range		Possible Range	
ID				Default	Min	Max	Min	Max
.027	ULL >> off	U_{THR} OFF	%Unom	115	100	125	100	135
.028	ULL >> on	U_{THR} ON	%Unom	110	100	110	100	135
.029	T ULL >>	Time OFF	ms	100	50	180000	50	180000
Only active for:		Connection Modes: 3-wire, 4-wire (LN+LL)						
Comment:		ULL >> on has a fixed offset of 0.5% U_{NOM} subtracted from the displayed value						

Overvoltage2 Line to Neutral					Conformity Range		Possible Range	
ID				Default	Min	Max	Min	Max
.035	ULN >> off	U_{THR} OFF	%Unom	115	100	125	100	135
.036	ULN >> on	U_{THR} ON	%Unom	110	100	110	100	135

.037	T ULN >>	Time OFF	ms	100	50	180000	50	180000
Only active for:		Connection Modes: 2-wire, 4-wire (LN), 4-wire (LN+LL))						
Comment:		ULN >> on has a fixed offset of 0.5% U_{NOM} subtracted from the displayed value						

10 minutes average overvoltage					Conformity Range		Possible Range	
ID				Default	Min	Max	Min	Max
.042	U10min	Enable function		on	on/off		on /off	
.043	U10min off	U_{THR} OFF	%Unom	110	110	115	100	135
		U_{THR} ON	%Unom	Fixed Hysteresis (0.9% U_{NOM})				
		Time OFF	ms	Fixed to fastest possible disconnection				

Overfrequency1					Conformity Range		Possible Range	
ID				Default	Min	Max	Min	Max
.055	f > off	f_{THR} OFF	Hz	51.50	50.00	53.00	50.00	55.00
.056	f > on	f_{THR} ON	Hz	50.05	50.00	50.05	50.00	55.00
.057	T f >	Time OFF	ms	50	50	50	50	180000
Comment:		f > on has a fixed offset of 0.01 Hz subtracted to the displayed value						

Underfrequency1					Conformity Range		Possible Range	
ID				Default	Min	Max	Min	Max
.059	f < off	f_{THR} OFF	Hz	47.50	47.00	50.00	45.00	50.00
.060	f < on	f_{THR} ON	Hz	47.50	47.50	50.00	45.00	50.00
.061	T f <	Time OFF	ms	50	50	50	50	180000
Comment:		f < on has a fixed offset of 0.01 Hz added to the displayed value						

Frequency measuring in general					Conformity Range		Possible Range	
ID				Default	Min	Max	Min	Max
.113	F wnd	Window length	ms	Fixed window length 100ms				

Auxiliary Contact type			Conformity Range		Possible Range	
ID		Default	Min	Max	Min	Max

.099	Contact	Type	n.c. (normally closed)	n.o. (normally opened) n.c. (normally closed)	n.o. (normally opened) n.c. (normally closed) dis. (disabled)
.100	T Contact	Time OFF	ms	Fixed to 500ms	
.114	I3 STOP	Type	n.o. (normally opened)	n.o. (normally opened) n.c. (normally closed) dis. (disabled)	n.o. (normally opened) n.c. (normally closed) dis. (disabled)

Turn-on delay					Conformity Range		Possible Range	
ID				Default	Min	Max	Min	Max
.102	Ton delay	Turn on time	s	120	0	1800	0	1800

Password					
ID			Default	Min	Max
.106	PW1	1st digit of Password	0	0	9
.107	PW2	2nd digit of Password	0	0	9
.108	PW3	3rd digit of Password	0	0	9
.109	PW4	4th digit of Password	0	0	9
Remark:		If all 4 digits of the Password are 0 (default setting) the Password request is skipped			

Errorlogic signalled (shown) on output relay R3.

On = it is possible to detect this error

Off = it is not possible to show this error on relay R3

Overvoltage LL (UΔ)	on
Undervoltage LL (UΔ)	on
Overvoltage LN (UY)	on
Undervoltage LN (UY)	on
10-min overvoltage (Ū)	on
Overfrequency (f)	on

Underfrequency (f)	on
RoCoF (Rate of Change of Frequency) (Δf)	on
Phase shift (ΔΦ)	on
Remote shutdown / self-test (R)	on
Contactor feedback contact reports closed, although it should be open (C)	on
Contactor feedback contact reports open, although it should be closed (no error, only info) (c)	on

Device Information		
ID		
.105	ID: xxxxxxxxxx SW: aa.dd.ccb	xxxxxxxxxx = Device ID dd: Software version of Display Software aa: Software version of Measuring Software cc: Index of Configuration set b: Version of Configuration set

10.34 NA/EEA-NE7 - CH 2020 [ID 1220] Low Voltage Type A > 800W to ≤ 250kW

Connection Mode			Conformity Range	Possible Range
ID		Default		
.003	Connection	4-wire (LN+LL)	4-wire (LN+LL)	2-wire, 3-wire, 4-wire (LN), 4-wire (LN+LL)

Nominal Voltage					Conformity Range		Possible Range	
ID				Default	Min	Max	Min	Max
.005	ULN/LL nom	Unom Y	V	230.0	230.0	230.0	28.8	241.4
		Unom Δ	V	400.0	400.0	400.0	50.0	420.0

Functional Safety			Conformity Range	Possible Range
ID		Default		
.007	Errtol	Fixed to 2ch		
Remark:		2ch means: 2 channel with functional safety and 2 auxilliary contacts necessary		

Overvoltage1 Line to Line					Conformity Range		Possible Range	
ID				Default	Min	Max	Min	Max
.010	ULL >	Enable function		off	on / off		on /off	
.011	ULL > off	U_{THR} OFF	%Unom	110	100	115	100	135
.012	ULL > on	U_{THR} ON	%Unom	110	100	110	100	135
.013	T ULL >	Time OFF	ms	60000	50	180000	50	180000
Only active for:		Connection Modes: 3-wire, 4-wire (LN+LL)						
Comment:		ULL > on has a fixed offset of 0.5% U_{NOM} subtracted from the displayed value						

Undervoltage1 Line to Line					Conformity Range		Possible Range	
ID				Default	Min	Max	Min	Max
.015	ULL < off	U_{THR} OFF	%Unom	80	10	100	10	100
.016	ULL < on	U_{THR} ON	%Unom	85	85	100	10	100
.017	T ULL <	Time OFF	ms	1500	50	10000	50	180000
Only active for:		Connection Modes: 3-wire, 4-wire (LN+LL)						

Comment:	ULL > on has a fixed offset of 0.5% U_{NOM} added to the displayed value

Overvoltage1 Line to Neutral					Conformity Range		Possible Range	
ID				Default	Min	Max	Min	Max
.018	ULN >	Enable function		off	on / off		on /off	
.019	ULN > off	U_{THR} OFF	%Unom	110	100	115	100	135
.020	ULN > on	U_{THR} ON	%Unom	110	100	110	100	135
.021	T ULN >	Time OFF	ms	60000	50	180000	50	180000
Only active for:		Connection Modes: 2-wire, 4-wire (LN), 4-wire (LN+LL)						
Comment:		ULN > on has a fixed offset of 0.5% U_{NOM} subtracted from the displayed value						

Undervoltage1 Line to Neutral					Conformity Range		Possible Range	
ID				Default	Min	Max	Min	Max
.023	ULN < off	U_{THR} OFF	%Unom	80	10	100	10	100
.024	ULN < on	U_{THR} ON	%Unom	85	85	100	10	100
.025	T ULN <	Time OFF	ms	1500	50	10000	50	180000
Only active for:		Connection Modes: 2-wire, 4-wire (LN), 4-wire (LN+LL)						
Comment:		ULN > on has a fixed offset of 0.5% U_{NOM} added to the displayed value						

Overvoltage2 Line to Line					Conformity Range		Possible Range	
ID				Default	Min	Max	Min	Max
.027	ULL >> off	U_{THR} OFF	%Unom	120	100	125	100	135
.028	ULL >> on	U_{THR} ON	%Unom	110	100	110	100	135
.029	T ULL >>	Time OFF	ms	100	50	1000	50	180000
Only active for:		Connection Modes: 3-wire, 4-wire (LN+LL)						
Comment:		ULL >> on has a fixed offset of 0.5% U_{NOM} subtracted from the displayed value						

Undervoltage2 Line to Line					Conformity Range		Possible Range	
ID				Default	Min	Max	Min	Max
.031	ULL << off	U_{THR} OFF	%Unom	45	10	100	10	100
.032	ULL << on	U_{THR} ON	%Unom	85	85	100	10	100

.033	T ULL <<	Time OFF	ms	300	50	1000	50	180000
Only active for:		Connection Modes: 3-wire, 4-wire (LN+LL)						
Comment:		ULL << on has a fixed offset of 0.5% U_{NOM} added to the displayed value						

Overvoltage2 Line to Neutral					Conformity Range		Possible Range	
ID				Default	Min	Max	Min	Max
.035	ULN >> off	U_{THR} OFF	%Unom	120	100	125	100	135
.036	ULN >> on	U_{THR} ON	%Unom	110	100	110	100	135
.037	T ULN >>	Time OFF	ms	100	50	1000	50	180000
Only active for:		Connection Modes: 2-wire, 4-wire (LN), 4-wire (LN+LL))						
Comment:		ULN >> on has a fixed offset of 0.5% U_{NOM} subtracted from the displayed value						

Undervoltage2 Line to Neutral					Conformity Range		Possible Range	
ID				Default	Min	Max	Min	Max
.039	ULN << off	U_{THR} OFF	%Unom	45	10	100	10	100
.040	ULN << on	U_{THR} ON	%Unom	85	85	100	10	100
.041	T ULN <<	Time OFF	ms	300	50	1000	50	180000
Only active for:		Connection Modes: 2-wire, 4-wire (LN), 4-wire (LN+LL)						
Comment:		ULN << on has a fixed offset of 0.5% U_{NOM} added to the displayed value						

10 minutes average overvoltage					Conformity Range		Possible Range	
ID				Default	Min	Max	Min	Max
.042	U10min	Enable function		On	on/off		on /off	
.043	U10min off	U_{THR} OFF	%Unom	110	110	115	100	135
		U_{THR} ON	%Unom	Fixed Hysteresis (0.9% U_{NOM})				
		Time OFF	ms	Fixed to fastest possible disconnection				

Overfrequency1					Conformity Range		Possible Range	
ID				Default	Min	Max	Min	Max
.055	f > off	f_{THR} OFF	Hz	51.50	50.00	53.00	50.00	55.00
.056	f > on	f_{THR} ON	Hz	50.1	50.00	50.1	50.00	55.00

.057	T f >	Time OFF	ms	50	50	50	50	180000
Comment:		f < on has a fixed offset of 0.01 Hz added to the displayed value						

Underfrequency1					Conformity Range		Possible Range	
ID				Default	Min	Max	Min	Max
.059	f < off	f_{THR} OFF	Hz	47.50	47.00	50.00	45.00	50.00
.060	f < on	f_{THR} ON	Hz	47.50	47.50	50.00	45.00	50.00
.061	T f <	Time OFF	ms	50	50	50	50	180000
Comment:		f < on has a fixed offset of 0.01 Hz added to the displayed value						

Rate of Change of Frequency (RoCoF)					Conformity Range		Possible Range	
ID				Default	Min	Max	Min	Max
.090	RoCoF	Enable Function		off	on / off		on / off	
.091	RoCoF off	RoCoF$_{THR}$ OFF	mHz/s	2000	2000	2000	100	5000
.092	RoCoF on	RoCoF$_{THR}$ ON	mHz/s	1900	100	1900	100	5000
.093	RoCoF t	Time OFF	ms	0	0	500	0	10000
.111	RoCoF wnd	Window length	ms	Fixed window length 500ms				

Frequency measuring in general					Conformity Range		Possible Range	
ID				Default	Min	Max	Min	Max
.113	F wnd	Window length	ms	Fixed window length 100ms				

Auxiliary Contact type				Conformity Range		Possible Range	
ID			Default	Min	Max	Min	Max
.099	Contact	Type	n.c. (normally closed)	n.o. (normally opened) n.c. (normally closed)		n.o. (normally opened) n.c. (normally closed) dis. (disabled)	
.100	T Contact	Time OFF	ms	Fixed to 500ms			
.114	I3 STOP	Type	n.o. (normally opened)	n.o. (normally opened)		n.o. (normally opened)	

				n.c. (normally closed) dis. (disabled)	n.c. (normally closed) dis. (disabled)

Turn-on delay					Conformity Range		Possible Range	
ID				Default	Min	Max	Min	Max
.102	Ton delay	Turn on time	s	60	60	1800	0	1800

Password					
ID			Default	Min	Max
.106	PW1	1st digit of Password	0	0	9
.107	PW2	2nd digit of Password	0	0	9
.108	PW3	3rd digit of Password	0	0	9
.109	PW4	4th digit of Password	0	0	9
Remark:		If all 4 digits of the Password are 0 (default setting) the Password request is skipped			

Errorlogic signalled (shown) on output relay R3. On = it is possible to detect this error Off = it is not possible to show this error on relay R3	
Overvoltage LL (UΔ)	on
Undervoltage LL (UΔ)	on
Overvoltage LN (UY)	on
Undervoltage LN (UY)	on
10-min overvoltage (Ū)	on
Overfrequency (f)	on
Underfrequency (f)	on
RoCoF (Rate of Change of Frequency) (Δf)	on
Phase shift (ΔΦ)	on
Remote shutdown / self-test (R)	on
Contactor feedback contact reports closed, although it should be open (C)	on
Contactor feedback contact reports open, although it should be closed (no error, only info) (c)	on

Device Information		
ID		
.105	ID: xxxxxxxxxx	xxxxxxxxxx = Device ID
	SW: aa.dd.ccb	dd: Software version of Display Software aa: Software version of Measuring Software cc: Index of Configuration set b: Version of Configuration set

10.35 NA/EEA-NE7 - CH 2020 [ID 1221] Low Voltage Type B > 250kW to ≤ 36MW

Connection Mode			Conformity Range	Possible Range
ID		Default		
.003	Connection	4-wire (LN+LL)	4-wire (LN+LL)	2-wire, 3-wire, 4-wire (LN), 4-wire (LN+LL)

Nominal Voltage					Conformity Range		Possible Range	
ID				Default	Min	Max	Min	Max
.005	ULN/LL nom	Unom Y	V	230.0	230.0	230.0	28.8	241.4
		Unom Δ	V	400.0	400.0	400.0	50.0	420.0

Functional Safety			Conformity Range	Possible Range
ID		Default		
.007	Errtol	Fixed to 2ch		
Remark:		2ch means: 2 channel with functional safety and 2 auxilliary contacts necessary		

Overvoltage1 Line to Line					Conformity Range		Possible Range	
ID				Default	Min	Max	Min	Max
.010	ULL >	Enable function		off	on / off		on /off	
.011	ULL > off	UTHR OFF	%Unom	110	100	115	100	135
.012	ULL > on	UTHR ON	%Unom	110	100	110	100	135
.013	T ULL >	Time OFF	ms	60000	50	180000	50	180000
Only active for:		Connection Modes: 3-wire, 4-wire (LN+LL)						
Comment:		ULL > on has a fixed offset of 0.5% UNOM subtracted from the displayed value						

Undervoltage1 Line to Line					Conformity Range		Possible Range	
ID				Default	Min	Max	Min	Max
.015	ULL < off	UTHR OFF	%Unom	80	10	100	10	100
.016	ULL < on	UTHR ON	%Unom	85	85	100	10	100
.017	T ULL <	Time OFF	ms	1000	50	10000	50	180000
Only active for:		Connection Modes: 3-wire, 4-wire (LN+LL)						

Comment:	ULL > on has a fixed offset of 0.5% U_{NOM} added to the displayed value

Overvoltage1 Line to Neutral					Conformity Range		Possible Range	
ID				Default	Min	Max	Min	Max
.018	ULN >	Enable function		off	on / off		on /off	
.019	ULN > off	U_{THR} OFF	%Unom	110	100	115	100	135
.020	ULN > on	U_{THR} ON	%Unom	110	100	110	100	135
.021	T ULN >	Time OFF	ms	60000	50	180000	50	180000
Only active for:		Connection Modes: 2-wire, 4-wire (LN), 4-wire (LN+LL)						
Comment:		ULN > on has a fixed offset of 0.5% U_{NOM} subtracted from the displayed value						

Undervoltage1 Line to Neutral					Conformity Range		Possible Range	
ID				Default	Min	Max	Min	Max
.023	ULN < off	U_{THR} OFF	%Unom	80	10	100	10	100
.024	ULN < on	U_{THR} ON	%Unom	85	85	100	10	100
.025	T ULN <	Time OFF	ms	1000	50	10000	50	180000
Only active for:		Connection Modes: 2-wire, 4-wire (LN), 4-wire (LN+LL)						
Comment:		ULN > on has a fixed offset of 0.5% U_{NOM} added to the displayed value						

Overvoltage2 Line to Line					Conformity Range		Possible Range	
ID				Default	Min	Max	Min	Max
.027	ULL >> off	U_{THR} OFF	%Unom	120	100	125	100	135
.028	ULL >> on	U_{THR} ON	%Unom	11010	100	110	100	135
.029	T ULL >>	Time OFF	ms	100	50	1000	50	180000
Only active for:		Connection Modes: 3-wire, 4-wire (LN+LL)						
Comment:		ULL >> on has a fixed offset of 0.5% U_{NOM} subtracted from the displayed value						

Undervoltage2 Line to Line					Conformity Range		Possible Range	
ID				Default	Min	Max	Min	Max
.031	ULL << off	U_{THR} OFF	%Unom	45	10	100	10	100
.032	ULL << on	U_{THR} ON	%Unom	85	85	100	10	100

.033	T ULL <<	Time OFF	ms	300	50	1000	50	180000
Only active for:		Connection Modes: 3-wire, 4-wire (LN+LL)						
Comment:		ULL << on has a fixed offset of 0.5% UNOM added to the displayed value						

Overvoltage2 Line to Neutral					Conformity Range		Possible Range	
ID				Default	Min	Max	Min	Max
.035	ULN >> off	UTHR OFF	%Unom	120	100	125	100	135
.036	ULN >> on	UTHR ON	%Unom	11010	100	110	100	135
.037	T ULN >>	Time OFF	ms	100	50	1000	50	180000
Only active for:		Connection Modes: 2-wire, 4-wire (LN), 4-wire (LN+LL))						
Comment:		ULN >> on has a fixed offset of 0.5% UNOM subtracted from the displayed value						

Undervoltage2 Line to Neutral					Conformity Range		Possible Range	
ID				Default	Min	Max	Min	Max
.039	ULN << off	UTHR OFF	%Unom	45	10	100	10	100
.040	ULN << on	UTHR ON	%Unom	85	85	100	10	100
.041	T ULN <<	Time OFF	ms	300	50	1000	50	180000
Only active for:		Connection Modes: 2-wire, 4-wire (LN), 4-wire (LN+LL)						
Comment:		ULN << on has a fixed offset of 0.5% UNOM added to the displayed value						

10 minutes average overvoltage					Conformity Range		Possible Range	
ID				Default	Min	Max	Min	Max
.042	U10min	Enable function		On	on/off		on /off	
.043	U10min off	UTHR OFF	%Unom	110	110	115	100	135
		UTHR ON	%Unom	Fixed Hysteresis (0.9% UNOM)				
		Time OFF	ms	Fixed to fastest possible disconnection				

Overfrequency1					Conformity Range		Possible Range	
ID				Default	Min	Max	Min	Max
.055	f > off	fTHR OFF	Hz	51.50	50.00	53.00	50.00	55.00
.056	f > on	fTHR ON	Hz	50.1	50.00	50.1	50.00	55.00

.057	T f >	Time OFF	ms	50	50	50	50	180000
Comment:		f < on has a fixed offset of 0.01 Hz added to the displayed value						

Underfrequency1					Conformity Range		Possible Range	
ID				Default	Min	Max	Min	Max
.059	f < off	f_{THR} OFF	Hz	47.50	47.00	50.00	45.00	50.00
.060	f < on	f_{THR} ON	Hz	47.50	47.50	50.00	45.00	50.00
.061	T f <	Time OFF	ms	50	50	50	50	180000
Comment:		f < on has a fixed offset of 0.01 Hz added to the displayed value						

Rate of Change of Frequency (RoCoF)					Conformity Range		Possible Range	
ID				Default	Min	Max	Min	Max
.090	RoCoF	Enable Function		off	on / off		on / off	
.091	RoCoF off	RoCoF$_{THR}$ OFF	mHz/s	2000	2000	2000	100	5000
.092	RoCoF on	RoCoF$_{THR}$ ON	mHz/s	1900	100	1900	100	5000
.093	RoCoF t	Time OFF	ms	0	0	500	0	10000
.111	RoCoF wnd	Window length	ms	Fixed window length 500ms				

Frequency measuring in general					Conformity Range		Possible Range	
ID				Default	Min	Max	Min	Max
.113	F wnd	Window length	ms	Fixed window length 100ms				

Auxiliary Contact type				Conformity Range		Possible Range	
ID			Default	Min	Max	Min	Max
.099	Contact	Type	n.c. (normally closed)	n.o. (normally opened) n.c. (normally closed)		n.o. (normally opened) n.c. (normally closed) dis. (disabled)	
.100	T Contact	Time OFF	ms	Fixed to 500ms			
.114	I3 STOP	Type	n.o. (normally opened)	n.o. (normally opened)		n.o. (normally opened)	

				n.c. (normally closed) dis. (disabled)	n.c. (normally closed) dis. (disabled)

Turn-on delay					Conformity Range		Possible Range	
ID				Default	Min	Max	Min	Max
.102	Ton delay	Turn on time	s	600	60	1800	0	1800

Password					
ID			Default	Min	Max
.106	PW1	1st digit of Password	0	0	9
.107	PW2	2nd digit of Password	0	0	9
.108	PW3	3rd digit of Password	0	0	9
.109	PW4	4th digit of Password	0	0	9
Remark:		If all 4 digits of the Password are 0 (default setting) the Password request is skipped			

Errorlogic signalled (shown) on output relay R3. On = it is possible to detect this error Off = it is not possible to show this error on relay R3	
Overvoltage LL (UΔ)	on
Undervoltage LL (UΔ)	on
Overvoltage LN (UY)	on
Undervoltage LN (UY)	on
10-min overvoltage ($\bar{U}$)	on
Overfrequency (f)	on
Underfrequency (f)	on
RoCoF (Rate of Change of Frequency) (Δf)	on
Phase shift (ΔΦ)	on
Remote shutdown / self-test (R)	on
Contactor feedback contact reports closed, although it should be open (C)	on
Contactor feedback contact reports open, although it should be closed (no error, only info) (c)	on

Device Information		
ID		
.105	ID: xxxxxxxxxx	xxxxxxxxxx = Device ID
	SW: aa.dd.ccb	dd: Software version of Display Software aa: Software version of Measuring Software cc: Index of Configuration set b: Version of Configuration set

10.36 EN50549-1:2019 LV Netherlands [ID 901]

Connection Mode			Conformity Range	Possible Range
ID		Default		
.003	Connection	4-wire (LN+LL)	2-wire, 3-wire, 4-wire (LN), 4-wire (LN+LL)	2-wire, 3-wire, 4-wire (LN), 4-wire (LN+LL)

Nominal Voltage					Conformity Range		Possible Range	
ID				Default	Min	Max	Min	Max
.005	ULN/LL nom	Unom Y Unom Δ	V V	230.0 400.0	57.5 100.0	230.0 400.0	100.0 50.0	230.0 400.0

Functional Safety			Conformity Range	Possible Range
ID		Default		
.007	Errtol	Fixed to 2ch		

Overvoltage1 Line to Line					Conformity Range		Possible Range	
ID				Default	Min	Max	Min	Max
.010	ULL >	Enable Function		on	on/off		on/off	
.011	ULL > off	U_{THR} OFF	%Unom	110	100	120	100	135
.012	ULL > on	U_{THR} ON	%Unom	109	100	120	100	135
.013	T ULL >	Time OFF	ms	200	100	100000	100	300000
Comment:		ULL > on has a fixed offset of 0.5% U_{NOM} subtracted from the displayed value						
Only active for:		Connection Modes: 3-wire, 4-wire (LN+LL)						

Undervoltage1 Line to Line					Conformity Range		Possible Range	
ID				Default	Min	Max	Min	Max
,014	ULL <	Enable Function		on	on/off		on/off	
.015	ULL < off	U_{THR} OFF	%Unom	80	20	100	10	100
.016	ULL < on	U_{THR} ON	%Unom	85	50	100	10	100
.017	T ULL <	Time OFF	ms	3000	100	100000	100	3000000
Comment:		ULL < on has a fixed offset of 0.5% U_{NOM} added to the displayed value						

Only active for:	Connection Modes: 3-wire, 4-wire (LN+LL)

Overvoltage1 Line to Neutral					Conformity Range		Possible Range	
ID				Default	Min	Max	Min	Max
.018	ULN >	Enable Function		on	on/off		on/off	
.019	ULN > off	U_{THR} OFF	%Unom	110	100	120	100	135
.020	ULN > on	U_{THR} ON	%Unom	109	100	120	100	135
.021	T ULN >	Time OFF	ms	200	100	100000	100	300000
Comment:		ULN > on has a fixed offset of 0.5% U_{NOM} subtracted from the displayed value						
Only active for:		Connection Modes: 2-wire, 4-wire (LN), 4-wire (LN+LL)						

Undervoltage1 Line to Neutral					Conformity Range		Possible Range	
ID				Default	Min	Max	Min	Max
.022	ULN <	Enable Function		on	on/off		on/off	
.023	ULN < off	U_{THR} OFF	%Unom	80	20	100	10	100
.024	ULN < on	U_{THR} ON	%Unom	85	50	100	10	100
.025	T LN <	Time OFF	ms	3000	100	100000	0	300000
Comment:		ULN < off has a fixed offset of 0.5% U_{NOM} added to the displayed value						
Only active for:		Connection Modes: 2-wire, 4-wire (LN), 4-wire (LN+LL))						

Overvoltage2 Line to Line					Conformity Range		Possible Range	
ID				Default	Min	Max	Min	Max
.026	ULL >>	Enable Function		on	on/off		on/off	
.027	ULL >> off	U_{THR} OFF	%Unom	120	100	120	100	135
.028	ULL >> on	U_{THR} ON	%Unom	109	100	120	100	135
.029	T ULL >	Time OFF	ms	100	100	5000	100	300000
Comment:		ULL >> on has a fixed offset of 0.5% U_{NOM} subtracted from the displayed value						
Only active for:		Connection Modes: 3-wire, 4-wire (LN+LL)						

Undervoltage2 Line to Line	*Conformity Range*	*Possible Range*

ID				*Default*	*Min*	*Max*	*Min*	*Max*
,030	ULL <<	Enable Function		on	on/off		on/off	
.031	ULL << off	UTHR OFF	%Unom	30	20	100	10	100
.032	ULL << on	UTHR ON	%Unom	85	50	100	10	100
.033	T ULL <<	Time OFF	ms	100	100	5000	100	3000000
Comment:		ULL << on has a fixed offset of 0.5% UNOM added to the displayed value						
Only active for:		Connection Modes: 3-wire, 4-wire (LN+LL)						

Overvoltage2 Line to Neutral					Conformity Range		Possible Range	
ID				Default	Min	Max	Min	Max
.034	ULN>>	Enable Function		on	on/off		on/off	
.035	ULN>> off	UTHR OFF	%Unom	120	100	130	100	135
.036	ULN>> on	UTHR ON	%Unom	109	100	120	100	135
.037	T ULN>>	Time OFF	ms	100	100	5000	100	300000
		Time OFF	ms	Fixed to fastest possible disconnection				
Comment:		U LN > off has a fixed offset of 0.5% UNOM subtracted from the displayed value						
Only active for:		Connection Modes: 2-wire, 4-wire (LN), 4-wire (LN+LL)						

Undervoltage2 Line to Neutral					Conformity Range		Possible Range	
ID				Default	Min	Max	Min	Max
.038	ULN<<	Enable Function		on	on/off		on/off	
.039	ULN<< off	UTHR OFF	%Unom	30	20	100	10	100
.040	ULN<< on	UTHR ON	%Unom	85	50	100	10	100
.041	T ULN<<	Time OFF	ms	100	100	5000	100	300000
Comment:		U LN < off has a fixed offset of 0.25% UNOM added to the displayed value						
Only active for:		Connection Modes: 2-wire, 4-wire (LN), 4-wire (LN+LL)						

10 minutes average overvoltage					Conformity Range		Possible Range	
ID				Default	Min	Max	Min	Max
.042	Uavg	Enable function		on	on / off		on /off	
.043	Uavg off	UTHR OFF	%Unom	110	100	115	100	135

.044	Uavg on	UTHR ON	%Unom	109	100	115	100	135
		Time OFF	ms	Fixed to fastest possible disconnection				

Zero Voltage Line to Neutral					Conformity Range		Possible Range	
ID				Default	Min	Max	Min	Max
.115	Uzero >	Enable Function		off	on/off		on/off	
.116	Uzero> off	UTHR OFF	%Unom	20	1	100	1	100
.117	Uzero> on	UTHR ON	%Unom	15	1	100	1	100
.118	T Uzero >	Time OFF	ms	1500	200	100000	0	300000
Only active for:		Connection Modes: 4-wire (LN+LL)						

Residual Voltage (3 x Zero Voltage) Line to Neutral Activation of a narrower frequency window					Conformity Range		Possible Range	
ID				Default	Min	Max	Min	Max
.119	Ures-anfw>	Enable Function		off	on/off		on/off	
.120	U res > on	UTHR OFF	%Unom	5	2	20	2	200
.121	U res > off	UTHR ON	%Unom	3	1	20	1	100
.122	T Ures >	Time OFF	ms	200	0	240000	0	240000
Only active for:		Connection Modes: 4-wire (LN+LL)						

Undervoltage Line to Neutral Activation of a narrower frequency window					Conformity Range		Possible Range	
ID				Default	Min	Max	Min	Max
.123	Uanfw <	Enable Function		off	on/off		on/off	
.124	Uanfw< on	UTHR OFF	%Unom	85	21	100	2	100
.125	Uanfw< off	UTHR ON	%Unom	86	21	100	2	100
.126	T Uanfw <	Time OFF	ms	0	0	240000	0	240000
Only active for:		Connection Modes: 4-wire (LN+LL)						

Overfrequency1					Conformity Range		Possible Range	
ID				Default	Min	Max	Min	Max

.054	f >	Enable Function		on	on		on/off	
.055	f > off	f_{THR} OFF	Hz	51.50	50.00	52.00	50.00	55.00
.056	f > on	f_{THR} ON	Hz	50.10	50.00	52.00	50.00	55.00
.057	T f >	Time OFF	ms	100	100	100000	100	300000
Comment:		f > on has a fixed offset of 0.01 Hz subtracted to the displayed value						
Only active for:		Voltage > 20% U_{NOM}						

Underfrequency1					Conformity Range		Possible Range	
ID				Default	Min	Max	Min	Max
.058	f <	Enable Function		on	on		on/off	
.059	f < off	f_{THR} OFF	Hz	47.50	47.00	50.00	45.00	50.00
.060	f < on	f_{THR} ON	Hz	48.50	47.00	50.00	45.00	50.00
.061	T f <	Time OFF	ms	100	100	100000	100	300000
Comment:		f < on has a fixed offset of 0.01 Hz added to the displayed value						
Only active for:		Voltage > 20% U_{NOM}						

Overfrequency nw (narrower window)					Conformity Range		Possible Range	
ID				Default	Min	Max	Min	Max
.062	f nw >	Enable Function		off	on/off		on/off	
.063	f nw > off	f_{THR} OFF	Hz	50.30	50.00	52.00	50.00	55.00
.064	f nw > on	f_{THR} ON	Hz	50.10	50.00	52.00	50.00	55.00
.065	T f nw >	Time OFF	ms	500	100	5000	100	300000
Comment:		f nw > off has a fixed offset of 0.01 Hz subtracted to the displayed value						
Only active for:		Ures-anfw, Uanfw, Dig Input5=HIGH (local setting)						

Underfrequency nw (narrower window)					Conformity Range		Possible Range	
ID				Default	Min	Max	Min	Max
.066	f nw <	Enable Function		off	on/off		on/off	
.067	f nw < off	f_{THR} OFF	Hz	49.70	47.00	50.00	45.00	50.00
.068	f nw < on	f_{THR} ON	Hz	49.80	47.00	50.00	45.00	50.00

.069	T f nw <	Time OFF	ms	500	100	5000	100	300000
Comment:		f nw < off has a fixed offset of 0.01 Hz added to the displayed value						
Only active for:		Ures-anfw, Uanfw, Dig Input5=HIGH (local setting)						

Frequency measuring in general					Conformity Range		Possible Range	
ID				Default	Min	Max	Min	Max
.113	F wnd	Window length	ms	Fixed window length 100ms				

Rate of Change of Frequency (RoCoF)					Conformity Range		Possible Range	
ID				Default	Min	Max	Min	Max
.090	ROCOF	Enable Function		off	on / off		on / off	
.091	ROCOF off	RoCoF$_{THR}$ OFF	mHz/s	1000	200	9990	100	9990
.092	ROCOF on	RoCoF$_{THR}$ ON	mHz/s	800	100	9990	100	9990
.093	ROCOF t	Time OFF	ms	0	0	5000	0	5000
.111	RoCoF wnd	Window length	ms	Fixed window length 100ms				

Phase Shift (PShift)					Conformity Range		Possible Range	
ID				Default	Min	Max	Min	Max
.094	PShift	Enable Function		off	on / off		on / off	
.095	PShift off	PShift$_{THR}$ OFF	°	7	2	15	2	15
.096	PShift on	PShift$_{THR}$ ON	°	5	1	15	1	15
		Time OFF	ms	Fixed to the fastest possible disconnection				
.112	PShift wnd	Window length	ms	Fixed window length 100ms				
Comment:		PShift off has a fixed offset of 1° subtracted from the displayed value						

Auxiliary Contact type				Conformity Range		Possible Range	
ID			Default	Min	Max	Min	Max
.099	Contact	Type	dis. (disabled)	n.o. (normally opened) n.c. (normally closed)		n.o. (normally opened) n.c. (normally closed)	

					dis. (disabled)		dis. (disabled)	
.100	Contact t	Time OFF	ms	500				
.114	I3 STOP	Type	n.o. (normally opened)		n.o. (normally opened) n.c. (normally closed) dis. (disabled)		n.o. (normally opened) n.c. (normally closed) dis. (disabled)	

Turn-on delay					Conformity Range		Possible Range	
ID				Default	Min	Max	Min	Max
.102	T on delay	Turn on time	s	60	10	600	10	900

Password					
ID			Default	Min	Max
.106	PW1	1st digit of Password	0	0	9
.107	PW2	2nd digit of Password	0	0	9
.108	PW3	3rd digit of Password	0	0	9
.109	PW4	4th digit of Password	0	0	9
Remark:		If all 4 digits of the Password are 0 (default setting) the Password request is skipped			

Errorlogic signalled (shown) on output relay R3.

On = it is possible to detect this error

Off = it is not possible to show this error on relay R3

Overvoltage LL (UΔ)	off
Undervoltage LL (UΔ)	off
Overvoltage LN (UY)	off
Undervoltage LN (UY)	off
10-min overvoltage (Ū)	off
Overfrequency (f)	off
Underfrequency (f)	off
RoCoF (Rate of Change of Frequency) (Δf)	off
Phase shift (ΔΦ)	off

Remote shutdown / self-test (R)	off
Contactor feedback contact reports closed, although it should be open (C)	on
Contactor feedback contact reports open, although it should be closed (no error, only info) (c)	on

Device Information		
ID		
.105	ID: xxxxxxxxxx SW: aa.dd.ccb	xxxxxxxxxx = Device ID dd: Software version of Display Software aa: Software version of Measuring Software cc: Index of Configuration set b: Version of Configuration set

10.37 EN50549-2:2019 HV Netherlands [ID 926]

Connection Mode			Conformity Range	Possible Range
ID		Default		
.003	Connection	4-wire (LN+LL)	3-wire, 4-wire (LN), 4-wire (LN+LL)	2-wire, 3-wire, 4-wire (LN), 4-wire (LN+LL)

Nominal Voltage					Conformity Range		Possible Range	
ID				Default	Min	Max	Min	Max
.005	ULN/LL nom	Unom Y	V	230.0	57.5	230.0	100.0	240.0
		Unom Δ	V	400.0	100.0	400.0	50.0	420.0

Functional Safety			Conformity Range	Possible Range
ID		Default		
.007	Errtol	Fixed to 2ch		

Overvoltage1 Line to Line					Conformity Range		Possible Range	
ID				Default	Min	Max	Min	Max
.010	ULL >	Enable Function		on	on/off		on/off	
.011	ULL > off	U_{THR} OFF	%Unom	110	100	120	100	135
.012	ULL > on	U_{THR} ON	%Unom	109	100	120	100	135
.013	T ULL >	Time OFF	ms	200	100	100000	100	300000
Comment:		ULL > on has a fixed offset of 0.5% U_{NOM} subtracted from the displayed value						
Only active for:		Connection Modes: 3-wire, 4-wire (LN+LL)						

Undervoltage1 Line to Line					Conformity Range		Possible Range	
ID				Default	Min	Max	Min	Max
,014	ULL <	Enable Function		on	on/off		on/off	
.015	ULL < off	U_{THR} OFF	%Unom	80	20	100	10	100
.016	ULL < on	U_{THR} ON	%Unom	90	50	100	10	100
.017	T ULL <	Time OFF	ms	3000	100	100000	100	3000000
Comment:		ULL < on has a fixed offset of 0.5% U_{NOM} added to the displayed value						

Only active for:	Connection Modes: 3-wire, 4-wire (LN+LL)

Overvoltage1 Line to Neutral					Conformity Range		Possible Range	
ID				Default	Min	Max	Min	Max
.018	ULN >	Enable Function		on	on/off		on/off	
.019	ULN > off	U_{THR} OFF	%Unom	110	100	120	100	135
.020	ULN > on	U_{THR} ON	%Unom	109	100	120	100	135
.021	T ULN >	Time OFF	ms	200	100	100000	100	300000
Comment:		ULN > on has a fixed offset of 0.5% U_{NOM} subtracted from the displayed value						
Only active for:		Connection Modes: 2-wire, 4-wire (LN), 4-wire (LN+LL)						

Undervoltage1 Line to Neutral					Conformity Range		Possible Range	
ID				Default	Min	Max	Min	Max
.022	ULN <	Enable Function		on	on/off		on/off	
.023	ULN < off	U_{THR} OFF	%Unom	80	20	100	10	100
.024	ULN < on	U_{THR} ON	%Unom	90	50	100	10	100
.025	T LN <	Time OFF	ms	3000	100	100000	0	300000
Comment:		ULN < off has a fixed offset of 0.5% U_{NOM} added to the displayed value						
Only active for:		Connection Modes: 2-wire, 4-wire (LN), 4-wire (LN+LL))						

Overvoltage2 Line to Line					Conformity Range		Possible Range	
ID				Default	Min	Max	Min	Max
.026	ULL >>	Enable Function		on	on/off		on/off	
.027	ULL >> off	U_{THR} OFF	%Unom	120	100	120	100	135
.028	ULL >> on	U_{THR} ON	%Unom	109	100	120	100	135
.029	T ULL >	Time OFF	ms	100	100	5000	100	300000
Comment:		ULL >> on has a fixed offset of 0.5% U_{NOM} subtracted from the displayed value						
Only active for:		Connection Modes: 3-wire, 4-wire (LN+LL)						

Undervoltage2 Line to Line	*Conformity Range*	*Possible Range*

ID				*Default*	*Min*	*Max*	*Min*	*Max*
,030	ULL <<	Enable Function		on	on/off		on/off	
.031	ULL << off	UTHR OFF	%Unom	30	20	100	10	100
.032	ULL << on	UTHR ON	%Unom	90	50	100	10	100
.033	T ULL <<	Time OFF	ms	100	100	5000	100	3000000
Comment:		ULL << on has a fixed offset of 0.5% UNOM added to the displayed value						
Only active for:		Connection Modes: 3-wire, 4-wire (LN+LL)						

Overvoltage2 Line to Neutral					Conformity Range		Possible Range	
ID				Default	Min	Max	Min	Max
.034	ULN>>	Enable Function		on	on/off		on/off	
.035	ULN>> off	UTHR OFF	%Unom	120	100	130	100	135
.036	ULN>> on	UTHR ON	%Unom	109	100	120	100	135
.037	T ULN>>	Time OFF	ms	100	100	5000	100	300000
		Time OFF	ms	Fixed to fastest possible disconnection				
Comment:		U LN > off has a fixed offset of 0.5% UNOM subtracted from the displayed value						
Only active for:		Connection Modes: 2-wire, 4-wire (LN), 4-wire (LN+LL)						

Undervoltage2 Line to Neutral					Conformity Range		Possible Range	
ID				Default	Min	Max	Min	Max
.038	ULN<<	Enable Function		on	on/off		on/off	
.039	ULN<< off	UTHR OFF	%Unom	30	20	100	10	100
.040	ULN<< on	UTHR ON	%Unom	90	50	100	10	100
.041	T ULN<<	Time OFF	ms	100	100	5000	100	300000
Comment:		U LN < off has a fixed offset of 0.25% UNOM added to the displayed value						
Only active for:		Connection Modes: 2-wire, 4-wire (LN), 4-wire (LN+LL)						

10 minutes average overvoltage					Conformity Range		Possible Range	
ID				Default	Min	Max	Min	Max
.042	Uavg	Enable function		on	on / off		on /off	
.043	Uavg off	UTHR OFF	%Unom	110	100	115	100	135

.044	Uavg on	UTHR ON	%Unom	109	100	115	100	135
		Time OFF	ms	Fixed to fastest possible disconnection				

Zero Voltage Line to Neutral					Conformity Range		Possible Range	
ID				Default	Min	Max	Min	Max
.115	Uzero >	Enable Function		off	on/off		on/off	
.116	Uzero> off	UTHR OFF	%Unom	20	1	100	1	100
.117	Uzero> on	UTHR ON	%Unom	15	1	100	1	100
.118	T Uzero >	Time OFF	ms	1500	200	100000	0	300000
Only active for:		Connection Modes: 4-wire (LN+LL)						

Residual Voltage (3 x Zero Voltage) Line to Neutral Activation of a narrower frequency window					Conformity Range		Possible Range	
ID				Default	Min	Max	Min	Max
.119	Ures-anfw>	Enable Function		off	on/off		on/off	
.120	U res > on	UTHR OFF	%Unom	5	2	20	2	200
.121	U res > off	UTHR ON	%Unom	3	1	20	1	100
.122	T Ures >	Time OFF	ms	200	0	240000	0	240000
Only active for:		Connection Modes: 4-wire (LN+LL)						

Undervoltage Line to Neutral Activation of a narrower frequency window					Conformity Range		Possible Range	
ID				Default	Min	Max	Min	Max
.123	Uanfw <	Enable Function		off	on/off		on/off	
.124	Uanfw< on	UTHR OFF	%Unom	85	21	100	2	100
.125	Uanfw< off	UTHR ON	%Unom	86	21	100	2	100
.126	T Uanfw <	Time OFF	ms	0	0	240000	0	240000
Only active for:		Connection Modes: 4-wire (LN+LL)						

Overfrequency1			Conformity Range		Possible Range	
ID		Default	Min	Max	Min	Max

.054	f >	Enable Function		on	on		on/off	
.055	f > off	f_{THR} OFF	Hz	51.50	50.00	52.00	50.00	55.00
.056	f > on	f_{THR} ON	Hz	50.10	50.00	52.00	50.00	55.00
.057	T f >	Time OFF	ms	100	100	100000	100	300000
Comment:		f > on has a fixed offset of 0.01 Hz subtracted to the displayed value						
Only active for:		Voltage > 20% U_{NOM}						

Underfrequency1					Conformity Range		Possible Range	
ID				Default	Min	Max	Min	Max
.058	f <	Enable Function		on	on		on/off	
.059	f < off	f_{THR} OFF	Hz	47.50	47.00	50.00	45.00	50.00
.060	f < on	f_{THR} ON	Hz	48.50	47.00	50.00	45.00	50.00
.061	T f <	Time OFF	ms	100	100	100000	100	300000
Comment:		f < on has a fixed offset of 0.01 Hz added to the displayed value						
Only active for:		Voltage > 20% U_{NOM}						

Overfrequency nw (narrower window)					Conformity Range		Possible Range	
ID				Default	Min	Max	Min	Max
.062	f nw >	Enable Function		off	on/off		on/off	
.063	f nw > off	f_{THR} OFF	Hz	50.30	50.00	52.00	50.00	55.00
.064	f nw > on	f_{THR} ON	Hz	50.10	50.00	52.00	50.00	55.00
.065	T f nw >	Time OFF	ms	500	100	5000	100	300000
Comment:		f nw > off has a fixed offset of 0.01 Hz subtracted to the displayed value						
Only active for:		Ures-anfw, Uanfw, Dig Input5=HIGH (local setting)						

Underfrequency nw (narrower window)					Conformity Range		Possible Range	
ID				Default	Min	Max	Min	Max
.066	f nw <	Enable Function		off	on/off		on/off	
.067	f nw < off	f_{THR} OFF	Hz	49.70	47.00	50.00	45.00	50.00
.068	f nw < on	f_{THR} ON	Hz	49.80	47.00	50.00	45.00	50.00

.069	T f nw <	Time OFF	ms	500	100	5000	100	300000
Comment:		f nw < off has a fixed offset of 0.01 Hz added to the displayed value						
Only active for:		Ures-anfw, Uanfw, Dig Input5=HIGH (local setting)						

Frequency measuring in general					Conformity Range		Possible Range	
ID				Default	Min	Max	Min	Max
.113	F wnd	Window length	ms	Fixed window length 100ms				

Rate of Change of Frequency (RoCoF)					Conformity Range		Possible Range	
ID				Default	Min	Max	Min	Max
.090	ROCOF	Enable Function		off	on / off		on / off	
.091	ROCOF off	RoCoF$_{THR}$ OFF	mHz/s	1000	200	9990	100	9990
.092	ROCOF on	RoCoF$_{THR}$ ON	mHz/s	800	100	9990	100	9990
.093	ROCOF t	Time OFF	ms	0	0	5000	0	5000
.111	RoCoF wnd	Window length	ms	Fixed window length 100ms				

Phase Shift (PShift)					Conformity Range		Possible Range	
ID				Default	Min	Max	Min	Max
.094	PShift	Enable Function		off	on / off		on / off	
.095	PShift off	PShift$_{THR}$ OFF	°	7	2	15	2	15
.096	PShift on	PShift$_{THR}$ ON	°	5	1	15	1	15
		Time OFF	ms	Fixed to the fastest possible disconnection				
.112	PShift wnd	Window length	ms	Fixed window length 100ms				
Comment:		PShift off has a fixed offset of 1° subtracted from the displayed value						

Auxiliary Contact type				Conformity Range		Possible Range	
ID			Default	Min	Max	Min	Max
.099	Contact	Type	dis. (disabled)	n.o. (normally opened) n.c. (normally closed)		n.o. (normally opened) n.c. (normally closed)	

					dis. (disabled)		dis. (disabled)	
.100	Contact t	Time OFF	ms	500				
.114	I3 STOP	Type	n.o. (normally opened)		n.o. (normally opened) n.c. (normally closed) dis. (disabled)		n.o. (normally opened) n.c. (normally closed) dis. (disabled)	

Turn-on delay					Conformity Range		Possible Range	
ID				Default	Min	Max	Min	Max
.102	T on delay	Turn on time	s	60	10	600	10	900

Password					
ID			Default	Min	Max
.106	PW1	1st digit of Password	0	0	9
.107	PW2	2nd digit of Password	0	0	9
.108	PW3	3rd digit of Password	0	0	9
.109	PW4	4th digit of Password	0	0	9
Remark:		If all 4 digits of the Password are 0 (default setting) the Password request is skipped			

Errorlogic signalled (shown) on output relay R3. On = it is possible to detect this error Off = it is not possible to show this error on relay R3	
Overvoltage LL (UΔ)	off
Undervoltage LL (UΔ)	off
Overvoltage LN (UY)	off
Undervoltage LN (UY)	off
10-min overvoltage (Ū)	off
Overfrequency (f)	off
Underfrequency (f)	off
RoCoF (Rate of Change of Frequency) (Δf)	off
Phase shift (ΔΦ)	off

Remote shutdown / self-test (R)	off
Contactor feedback contact reports closed, although it should be open (C)	on
Contactor feedback contact reports open, although it should be closed (no error, only info) (c)	on

Device Information		
ID		
.105	ID: xxxxxxxxxx	xxxxxxxxxx = Device ID
	SW: aa.dd.ccb	dd: Software version of Display Software aa: Software version of Measuring Software cc: Index of Configuration set b: Version of Configuration set

10.38 EN50549-1:2019 LV Ireland [ID 905]

Connection Mode			Conformity Range	Possible Range
ID		Default		
.003	Connection	4-wire LL+LN	2-wire LN - 4-wire LL+LN	2-wire LN - 4-wire LL+LN

Nominal Voltage				Conformity Range		Possible Range	
ID			Default	Min	Max	Min	Max
.005	ULN/LL nom	Unom Y Unom Δ	230,00V /400,00V	57,50V /100,00V	230,00V /400,00V	28,75V /50,00V	241,50V /420,00V

Functional Safety			Conformity Range	Possible Range
ID		Default		
.007	Errtol	2ch	2ch, 1ch	2ch, 1ch
Remark:		2ch means: 2 channel with functional safety and 2 auxilliary contacts necessary 1ch means: 1 channel without functional safety and 1 auxilliary contact1 necessary		

Overvoltage1 Line to Line					Conformity Range		Possible Range	
ID				Default	Min	Max	Min	Max
.010	ULL >	Enable function		on	on / off		on /off	
.011	ULL > off	UTHR OFF	%Unom /VUnom	117,00% (468,00V)	100,00% (400,00V)	120,00% (480,00V)	100,00% (400,00V)	135,00% (540,00V)
.012	ULL > on	UTHR ON	%Unom /VUnom	109,00% (436,00V)	100,00% (400,00V)	120,00% (480,00V)	100,00% (400,00V)	135,00% (540,00V)
.013	T ULL >	Time OFF		70000 ms	100 ms	100000 ms	100 ms	300000 ms
Only active for:		Connection Modes: 3-wire, 4-wire (LN+LL)						

Undervoltage1 Line to Line		Conformity Range		Possible Range	
ID	Default	Min	Max	Min	Max

.014	ULL <	Enable function		on	on / off		on /off	
.015	ULL < off	UTHR OFF	%Unom /VUnom	83,00% (332,00V)	20,00% (80,00V)	100,00% (400,00V)	10,00% (40,00V)	100,00% (400,00V)
.016	ULL < on	UTHR ON	%Unom /VUnom	85,00% (340,00V)	50,00% (200,00V)	100,00% (400,00V)	10,00% (40,00V)	100,00% (400,00V)
.017	T ULL <	Time OFF		700 ms	100 ms	100000 ms	100 ms	300000 ms
Only active for:		Connection Modes: 3-wire, 4-wire (LN+LL)						

Overvoltage1 Line to Neutral					Conformity Range		Possible Range	
ID				Default	Min	Max	Min	Max
.018	ULN >	Enable function		on	on / off		on /off	
.019	ULN > off	UTHR OFF	%Unom /VUnom	117,00% (269,10V)	100,00% (230,00V)	120,00% (276,00V)	100,00% (230,00V)	135,00% (310,50V)
.020	ULN > on	UTHR ON	%Unom /VUnom	109,00% (250,70V)	100,00% (230,00V)	120,00% (276,00V)	100,00% (230,00V)	135,00% (310,50V)
.021	T ULN >	Time OFF		70000 ms	100 ms	100000 ms	100 ms	300000 ms
Only active for:		Connection Modes: 2-wire, 4-wire (LN), 4-wire (LN+LL)						

Undervoltage1 Line to Neutral					Conformity Range		Possible Range	
ID				Default	Min	Max	Min	Max
.022	ULN <	Enable function		on	on / off		on /off	
.023	ULN < off	UTHR OFF	%Unom /VUnom	83,00% (190,90V)	20,00% (46,00V)	100,00% (230,00V)	10,00% (23,00V)	100,00% (230,00V)
.024	ULN < on	UTHR ON	%Unom /VUnom	85,00% (195,50V)	50,00% (115,00V)	100,00% (230,00V)	10,00% (23,00V)	100,00% (230,00V)
.025	T ULN <	Time OFF		700 ms	100 ms	100000 ms	100 ms	300000 ms
Only active for:		Connection Modes: 2-wire, 4-wire (LN), 4-wire (LN+LL))						

Overvoltage2 Line to Line					Conformity Range		Possible Range	
ID				Default	Min	Max	Min	Max
.026	ULL >>	Enable function		on	on / off		on /off	
.027	ULL >> off	U_{THR} OFF	%Unom /VUnom	122,00% (488,00V)	100,00% (400,00V)	130,00% (520,00V)	100,00% (400,00V)	135,00% (540,00V)
.028	ULL >> on	U_{THR} ON	%Unom /VUnom	109,00% (436,00V)	100,00% (400,00V)	120,00% (480,00V)	100,00% (400,00V)	135,00% (540,00V)
.029	T ULL >>	Time OFF		700 ms	100 ms	5000 ms	100 ms	300000 ms
Only active for:		Connection Modes: 3-wire, 4-wire (LN+LL)						

Undervoltage2 Line to Line					Conformity Range		Possible Range	
ID				Default	Min	Max	Min	Max
.030	ULL <<	Enable function		off	on / off		on /off	
.031	ULL << off	U_{THR} OFF	%Unom /VUnom	30,00% (120,00V)	20,00% (80,00V)	100,00% (400,00V)	10,00% (40,00V)	100,00% (400,00V)
.032	ULL << on	U_{THR} ON	%Unom /VUnom	85,00% (340,00V)	50,00% (200,00V)	100,00% (400,00V)	10,00% (40,00V)	100,00% (400,00V)
.033	T ULL <<	Time OFF		100 ms	100 ms	5000 ms	100 ms	300000 ms
Only active for:		Connection Modes: 3-wire, 4-wire (LN+LL)						

Overvoltage2 Line to Neutral					Conformity Range		Possible Range	
ID				Default	Min	Max	Min	Max
.034	ULN >>	Enable function		on	on / off		on /off	
.035	ULN >> off	U_{THR} OFF	%Unom /VUnom	122,00% (280,60V)	100,00% (230,00V)	130,00% (299,00V)	100,00% (230,00V)	135,00% (310,50V)
.036	ULN >> on	U_{THR} ON	%Unom /VUnom	109,00% (250,70V)	100,00% (230,00V)	120,00% (276,00V)	100,00% (230,00V)	135,00% (310,50V)
.037	T ULN >>	Time OFF		700 ms	100 ms	5000 ms	100 ms	300000 ms
Only active for:		Connection Modes: 2-wire, 4-wire (LN), 4-wire (LN+LL)						

Undervoltage2 Line to Neutral					Conformity Range		Possible Range	
ID				Default	Min	Max	Min	Max
.038	ULN <<	Enable function		off	on / off		on /off	
.039	ULN << off	U_{THR} OFF	%Unom /VUnom	30,00% (69,00V)	20,00% (46,00V)	100,00% (230,00V)	10,00% (23,00V)	100,00% (230,00V)
.040	ULN << on	U_{THR} ON	%Unom /VUnom	85,00% (195,50V)	50,00% (115,00V)	100,00% (230,00V)	10,00% (23,00V)	100,00% (230,00V)
.041	T ULN <<	Time OFF		100 ms	100 ms	5000 ms	100 ms	300000 ms
Only active for:		Connection Modes: 2-wire, 4-wire (LN), 4-wire (LN+LL)						

Zero Voltage Line to Neutral					Conformity Range		Possible Range	
ID				Default	Min	Max	Min	Max
.115	Uzero >	Enable Function		off	on/off		on/off	
.116	Uzero> off	U_{THR} OFF	%Unom /VUnom	20,00% (46,00V)	1,00% (2,30V)	100,00% (230,00V)	1,00% (2,30V)	100,00% (230,00V)
.117	Uzero> on	U_{THR} ON	%Unom /VUnom	15,00% (34,50V)	1,00% (2,30V)	100,00% (230,00V)	1,00% (2,30V)	100,00% (230,00V)
.118	T Uzero >	Time OFF		1500 ms	200 ms	100000 ms	0 ms	300000 ms
Only active for:		Connection Modes: 4-wire (LN+LL)						

Residual Voltage (3 x Zero Voltage) Line to Neutral Activation of a narrower frequency window					Conformity Range		Possible Range	
ID				Default	Min	Max	Min	Max
.119	Ures-anfw>	Enable Function		off	on/off		on/off	
.120	U res > on	U_{THR} OFF	%Unom /VUnom	5,00% (11,50V)	2,00% (4,60V)	20,00% (46,00V)	2,00% (4,60V)	100,00% (230,00V)
.121	Ures > off	U_{THR} ON	%Unom /VUnom	3,00% (6,90V)	1,00% (2,30V)	20,00% (46,00V)	1,00% (2,30V)	100,00% (230,00V)
.122	T Ures >	Time OFF		200 ms	0 ms	240000 ms	0 ms	240000 ms
Only active for:		Connection Modes: 4-wire (LN+LL)						

Undervoltage LN (UY) Activation of a narrower frequency winw					Conformity Range		Possible Range	
ID				Default	Min	Max	Min	Max
.123	Uanfw <	Enable Function		off	on/off		on/off	
.124	Uanfw< on	UTHR OFF	%Unom /VUnom	85,00% (195,50V)	20,00% (46,00V)	100,00% (230,00V)	1,00% (2,30V)	100,00% (230,00V)
.125	Uanfw< off	UTHR ON	%Unom /VUnom	86,00% (197,80V)	21,00% (48,30V)	100,00% (230,00V)	2,00% (4,60V)	100,00% (230,00V)
.126	T Uanfw <	Time OFF		0 ms	0 ms	240000 ms	0 ms	240000 ms
Only active for:		Connection Modes: 4-wire (LN+LL)						

10 minutes average overvoltage					Conformity Range		Possible Range	
ID				Default	Min	Max	Min	Max
.042	Uavg	Enable function		off	on / off		on /off	
.043	Uavg off	UTHR OFF	%Unom /VUnom	110,00% (253,00V /440,00V)	100,00% (230,00V /400,00V)	115,00% (264,50V /460,00V)	100,00% (230,00V /400,00V)	135,00% (310,50V /540,00V)
.044	Uavg on	UTHR ON	%Unom /VUnom	109,00% (250,70V /436,00V)	100,00% (230,00V /400,00V)	115,00% (264,50V /460,00V)	100,00% (230,00V /400,00V)	135,00% (310,50V /540,00V)

Overfrequency1				Conformity Range		Possible Range	
ID			Default	Min	Max	Min	Max
.054	f >	Enable function	on	on / off		on /off	
.055	f > off	fTHR OFF	52,000 Hz	50,000 Hz	52,000 Hz	50,000 Hz	55,000 Hz
.056	f > on	fTHR ON	50,100 Hz	50,000 Hz	52,000 Hz	50,000 Hz	55,000 Hz
.057	T f >	Time OFF	500 ms	100 ms	100000 ms	100 ms	300000 ms

Underfrequency1	Conformity Range	Possible Range

ID			Default	Min	Max	Min	Max
.058	f <	Enable function	on	on / off		on /off	
.059	f < off	f_{THR} OFF	47,000 Hz	47,000 Hz	50,000 Hz	45,000 Hz	50,000 Hz
.060	f < on	f_{THR} ON	48,500 Hz	47,000 Hz	50,000 Hz	45,000 Hz	50,000 Hz
.061	T f <	Time OFF	500 ms	100 ms	100000 ms	100 ms	300000 ms

Overfrequency2				Conformity Range		Possible Range	
ID			Default	Min	Max	Min	Max
.062	f nw >	Enable function	off	on / off		on /off	
.063	f nw > off	f_{THR} OFF	50,300 Hz	50,000 Hz	52,000 Hz	50,000 Hz	55,000 Hz
.064	f nw > on	f_{THR} ON	50,100 Hz	50,000 Hz	52,000 Hz	50,000 Hz	55,000 Hz
.065	T f nw >	Time OFF	500 ms	100 ms	5000 ms	100 ms	300000 ms

Underfrequency2				Conformity Range		Possible Range	
ID			Default	Min	Max	Min	Max
.066	f nw <	Enable function	off	on / off		on /off	
.067	f nw < off	f_{THR} OFF	49,700 Hz	47,000 Hz	50,000 Hz	45,000 Hz	50,000 Hz
.068	f nw < on	f_{THR} ON	49,800 Hz	47,000 Hz	50,000 Hz	45,000 Hz	50,000 Hz
.069	T f nw <	Time OFF	500 ms	100 ms	5000 ms	100 ms	300000 ms

Frequency measuring in general				Conformity Range			
ID			Default	Min	Max		
.113	F wnd	Window length	100 ms	100 ms	100 ms		

Rate of Change of Frequency (RoCoF)				Conformity Range		Possible Range	
ID			Default	Min	Max	Min	Max
.090	ROCOF	Enable Function	on	on / off		on / off	

.091	ROCOF off	RoCoF$_{THR}$ OFF	1000 mHz/s	200 mHz/s	9990 mHz/s	100 mHz/s	9990 mHz/s
.092	ROCOF on	RoCoF$_{THR}$ ON	800 mHz/s	100 mHz/s	9990 mHz/s	100 mHz/s	9990 mHz/s
.093	T ROCOF	Time OFF	0 ms	0 ms	5000 ms	0 ms	5000 ms

Phase Shift (PShift)				Conformity Range		Possible Range	
ID			Default	Min	Max	Min	Max
.094	Pshift	Enable Function	off	off		on / off	
.095	Pshift off	PShift $_{THR}$ OFF	7,0 °	2,0 °	15,0 °	2,0 °	15,0 °
.096	Pshift on	PShift $_{THR}$ ON	5,0 °	1,0 °	15,0 °	1,0 °	15,0 °

Auxiliary Contact type				Conformity Range		Possible Range	
ID			Default	Min	Max	Min	Max
.099	Contact	Type	n.c. (normally closed)	n.o. (normally opened) n.c. (normally closed)		n.o. (normally opened) n.c. (normally closed) dis. (disabled)	
.100	T Contact	Time OFF	Fixed to 500 ms				
.114	I3 STOP	Type	n.o. (normally opened)	n.o. (normally opened) n.c. (normally closed) dis. (disabled)		n.o. (normally opened) n.c. (normally closed) dis. (disabled)	

Turn-on delay				Conformity Range		Possible Range	
ID			Default	Min	Max	Min	Max
.102	T on delay	Turn on time	20 s	10 s	600 s	0 s	900 s

Password					
ID			Default	Min	Max
.106	PW1	1st digit of Password	0	0	9
.107	PW2	2nd digit of Password	0	0	9
.108	PW3	3rd digit of Password	0	0	9

.109	PW4	4th digit of Password	0	0	9
Remark:		If all 4 digits of the Password are 0 (default setting) the Password request is skipped			

Errorlogic signalled (shown) on output relay R3. On = it is possible to detect this error Off = it is not possible to show this error on relay R3	
Overvoltage LL (UΔ)	off
Undervoltage LL (UΔ)	off
Overvoltage LN (UY)	off
Undervoltage LN (UY)	off
10-min overvoltage (Ū)	off
Overfrequency (f)	off
Underfrequency (f)	off
RoCoF (Rate of Change of Frequency) (Δf)	off
Phase shift (ΔΦ)	off
Remote shutdown / self-test (R)	off
Contactor feedback contact reports closed, although it should be open (C)	on
Contactor feedback contact reports open, although it should be closed (no error, only info) (c)	on

Device Information		
ID		
.105	SN: xxxxxxxxxx SW: aa.dd.ccb	xxxxxxxxxx = Device Serial Number dd: Software version of Display Software aa: Software version of Measuring Software cc: Index of Configuration set b: Version of Configuration set

10.39 EN50438:2013 DK [ID 950]

Connection Mode			Conformity Range	Possible Range
ID		Default		
.003	Connection	4-wire (LN)	3-wire, 4-wire (LN)	2-wire, 3-wire, 4-wire (LN), 4-wire (LN+LL)

Nominal Voltage					Conformity Range		Possible Range	
ID				Default	Min	Max	Min	Max
.005	ULN/LL nom	Unom Y	V	230.0	230.0	230.0	100.0	240.0
		Unom Δ	V	400.0	400.0	400.0	173.9	417.4

Functional Safety			Conformity Range	Possible Range
ID		Default		
.007	Errtol	2ch	2ch, 1ch	2ch, 1ch
Remark:		2ch means: 2 channel with functional safety and 2 auxilliary contacts necessary 1ch means: 1 channel without functional safety and 1 auxilliary contact1 necessary		

Overvoltage1 Line to Line					Conformity Range		Possible Range	
ID				Default	Min	Max	Min	Max
.011	ULL max 1	UTHR OFF	%Unom	110	110	110	100	135
		UTHR ON	%Unom	Fixed Hysteresis (1% UNOM)				
.013	ULL max 1t	Time OFF	ms	39500	39500	39500	50	60000
Only active for:		Connection Modes: 3-wire, 4-wire (LN+LL)						

Undervoltage1 Line to Line					Conformity Range		Possible Range	
ID				Default	Min	Max	Min	Max
.015	ULL min	UTHR OFF	%Unom	90	90	90	10	100
		UTHR ON	%Unom	Fixed Hysteresis (1% UNOM)				
.017	ULL min t	Time OFF	ms	9500	9500	9500	50	60000
Only active for:		Connection Modes: 3-wire, 4-wire (LN+LL)						

Overvoltage1 Line to Neutral					Conformity Range		Possible Range	
ID				Default	Min	Max	Min	Max
.019	ULN max 1	U_{THR} OFF	%Unom	110	110	110	100	135
		U_{THR} ON	%Unom	Fixed Hysteresis (1% U_{NOM})				
.021	ULN max 1t	Time OFF	ms	39500	39500	39500	50	60000
Only active for:		Connection Modes: 2-wire, 4-wire (LN), 4-wire (LN+LL)						

Undervoltage1 Line to Neutral					Conformity Range		Possible Range	
ID				Default	Min	Max	Min	Max
.023	ULN min	U_{THR} OFF	%Unom	90	90	90	10	100
		U_{THR} ON	%Unom	Fixed Hysteresis (1% U_{NOM})				
.025	ULN min t	Time OFF	ms	9500	9500	9500	50	60000
Only active for:		Connection Modes: 2-wire, 4-wire (LN), 4-wire (LN+LL))						

Overvoltage2 Line to Line					Conformity Range		Possible Range	
ID				Default	Min	Max	Min	Max
.027	ULL max 2	U_{THR} OFF	%Unom	113	113	113	100	135
		U_{THR} ON	%Unom	Fixed Hysteresis (1% U_{NOM})				
		Time OFF	ms	Fixed to 100ms				
Only active for:		Connection Modes: 3-wire, 4-wire (LN+LL)						

Overvoltage2 Line to Neutral					Conformity Range		Possible Range	
ID				Default	Min	Max	Min	Max
.035	ULN max 2	U_{THR} OFF	%Unom	113	113	113	100	135
		U_{THR} ON	%Unom	Fixed Hysteresis (1% U_{NOM})				
		Time OFF	ms	Fixed to 100ms				
Only active for:		Connection Modes: 2-wire, 4-wire (LN), 4-wire (LN+LL)						

Overfrequency1					Conformity Range		Possible Range	
ID				Default	Min	Max	Min	Max
.055	f > off	f_{THR} OFF	Hz	52.00	52.00	52.00	50.00	55.00

.056	f > on	f_{THR} ON	Hz	50.05	50.05	50.05	50.00	55.00
		Time OFF	ms	Fixed to 150ms				

Underfrequency1					Conformity Range		Possible Range	
ID				Default	Min	Max	Min	Max
.059	f < off	f_{THR} OFF	Hz	47.50	47.50	47.50	45.00	50.00
.060	f < on	f_{THR} ON	Hz	47.50	47.50	47.50	45.00	50.00
		Time OFF	ms	Fixed to 150ms				
Comment:		f < on has a fixed offset of 0.025 Hz added to the displayed value						

Frequency measuring in general					Conformity Range		Possible Range	
ID				Default	Min	Max	Min	Max
.113	F wnd	Window length	ms	Fixed window length 100ms				

Rate of Change of Frequency (RoCoF)					Conformity Range		Possible Range	
ID				Default	Min	Max	Min	Max
.090	RoCoF	Enable Function		on	on / off		on / off	
.091	RoCoF off	$RoCoF_{THR}$ OFF	mHz/s	2500	2500	2500	100	3000
.092	RoCoF on	$RoCoF_{THR}$ ON	mHz/s	2300	2300	2300	100	3000
		Time OFF	ms	Fixed to the fastest possible disconnection				
.111	RoCoF wnd	Window length	ms	Fixed window length 200ms				

Auxiliary Contact type				Conformity Range		Possible Range	
ID			Default	Min	Max	Min	Max
.099	Contact	Type	n.c. (normally closed)	n.o. (normally opened) n.c. (normally closed)		n.o. (normally opened) n.c. (normally closed) dis. (disabled)	
.100	T Contact	Time OFF	ms	Fixed to 500ms			
.114	I3 STOP	Type	n.o. (normally opened)	n.o. (normally opened)		n.o. (normally opened)	

				n.c. (normally closed) dis. (disabled)	n.c. (normally closed) dis. (disabled)

Turn-on delay					Conformity Range		Possible Range	
ID				Default	Min	Max	Min	Max
.102	Ton delay	Turn on time	s	60	60	60	0	900

Password					
ID			Default	Min	Max
.106	PW1	1st digit of Password	0	0	9
.107	PW2	2nd digit of Password	0	0	9
.108	PW3	3rd digit of Password	0	0	9
.109	PW4	4th digit of Password	0	0	9
Remark:		If all 4 digits of the Password are 0 (default setting) the Password request is skipped			

Errorlogic signalled (shown) on output relay R3. On = it is possible to detect this error Off = it is not possible to show this error on relay R3	
Overvoltage LL (UΔ)	off
Undervoltage LL (UΔ)	off
Overvoltage LN (UY)	off
Undervoltage LN (UY)	off
10-min overvoltage (Ū)	off
Overfrequency (f)	off
Underfrequency (f)	off
RoCoF (Rate of Change of Frequency) (Δf)	off
Phase shift (ΔΦ)	off
Remote shutdown / self-test (R)	off
Contactor feedback contact reports closed, although it should be open (C)	off
Contactor feedback contact reports open, although it should be closed (no error, only info) (c)	off

Device Information		
ID		
.105	ID: xxxxxxxxxx	xxxxxxxxxx = Device ID
	SW: aa.dd.ccb	dd: Software version of Display Software aa: Software version of Measuring Software cc: Index of Configuration set b: Version of Configuration set

10.40 SRPS EN 50549-1:2020 LV (Serbia) [ID 910]

Connection Mode			Conformity Range	Possible Range
ID		Default		
.003	Connection	4-wire LL+LN	2-wire LN - 4-wire LL+LN	2-wire LN - 4-wire LL+LN

Nominal Voltage				Conformity Range		Possible Range	
ID			Default	Min	Max	Min	Max
.005	ULN/LL nom	Unom Y Unom Δ	230,00V /400,00V	57,50V /100,00V	230,00V /400,00V	28,75V /50,00V	241,50V /420,00V

Functional Safety			Conformity Range	Possible Range
ID		Default		
.007	Errtol	2ch	2ch, 1ch	2ch, 1ch
Remark:		2ch means: 2 channel with functional safety and 2 auxilliary contacts necessary 1ch means: 1 channel without functional safety and 1 auxilliary contact1 necessary		

Overvoltage1 Line to Line					Conformity Range		Possible Range	
ID				Default	Min	Max	Min	Max
.010	ULL >	Enable function		on	on / off		on /off	
.011	ULL > off	UTHR OFF	%Unom /VUnom	110,00% (440,00V)	100,00% (400,00V)	120,00% (480,00V)	100,00% (400,00V)	135,00% (540,00V)
.012	ULL > on	UTHR ON	%Unom /VUnom	109,00% (436,00V)	100,00% (400,00V)	120,00% (480,00V)	100,00% (400,00V)	135,00% (540,00V)
.013	T ULL >	Time OFF		200 ms	100 ms	100000 ms	100 ms	300000 ms
Only active for:		Connection Modes: 3-wire, 4-wire (LN+LL)						

Undervoltage1 Line to Line		Conformity Range		Possible Range	
ID		Default	Min	Max	Min	Max

.014	ULL <	Enable function		on	on / off		on / off	
.015	ULL < off	UTHR OFF	%Unom /VUnom	85,00% (340,00V)	20,00% (80,00V)	100,00% (400,00V)	10,00% (40,00V)	100,00% (400,00V)
.016	ULL < on	UTHR ON	%Unom /VUnom	85,00% (340,00V)	50,00% (200,00V)	100,00% (400,00V)	10,00% (40,00V)	100,00% (400,00V)
.017	T ULL <	Time OFF		3000 ms	100 ms	100000 ms	100 ms	300000 ms
Only active for:		Connection Modes: 3-wire, 4-wire (LN+LL)						

Overvoltage1 Line to Neutral					Conformity Range		Possible Range	
ID				Default	Min	Max	Min	Max
.018	ULN >	Enable function		on	on / off		on / off	
.019	ULN > off	UTHR OFF	%Unom /VUnom	110,00% (253,00V)	100,00% (230,00V)	120,00% (276,00V)	100,00% (230,00V)	135,00% (310,50V)
.020	ULN > on	UTHR ON	%Unom /VUnom	109,00% (250,70V)	100,00% (230,00V)	120,00% (276,00V)	100,00% (230,00V)	135,00% (310,50V)
.021	T ULN >	Time OFF		200 ms	100 ms	100000 ms	100 ms	300000 ms
Only active for:		Connection Modes: 2-wire, 4-wire (LN), 4-wire (LN+LL)						

Undervoltage1 Line to Neutral					Conformity Range		Possible Range	
ID				Default	Min	Max	Min	Max
.022	ULN <	Enable function		on	on / off		on / off	
.023	ULN < off	UTHR OFF	%Unom /VUnom	85,00% (195,50V)	20,00% (46,00V)	100,00% (230,00V)	10,00% (23,00V)	100,00% (230,00V)
.024	ULN < on	UTHR ON	%Unom /VUnom	85,00% (195,50V)	50,00% (115,00V)	100,00% (230,00V)	10,00% (23,00V)	100,00% (230,00V)
.025	T ULN <	Time OFF		3000 ms	100 ms	100000 ms	100 ms	300000 ms
Only active for:		Connection Modes: 2-wire, 4-wire (LN), 4-wire (LN+LL))						

Overvoltage2 Line to Line					Conformity Range		Possible Range	
ID				Default	Min	Max	Min	Max
.026	ULL >>	Enable function		off	on / off		on / off	
.027	ULL >> off	U_{THR} OFF	%Unom /VUnom	120,00% (480,00V)	100,00% (400,00V)	130,00% (520,00V)	100,00% (400,00V)	135,00% (540,00V)
.028	ULL >> on	U_{THR} ON	%Unom /VUnom	109,00% (436,00V)	100,00% (400,00V)	120,00% (480,00V)	100,00% (400,00V)	135,00% (540,00V)
.029	T ULL >>	Time OFF		100 ms	100 ms	5000 ms	100 ms	300000 ms
Only active for:		Connection Modes: 3-wire, 4-wire (LN+LL)						

Undervoltage2 Line to Line					Conformity Range		Possible Range	
ID				Default	Min	Max	Min	Max
.030	ULL <<	Enable function		off	on / off		on / off	
.031	ULL << off	U_{THR} OFF	%Unom /VUnom	30,00% (120,00V)	20,00% (80,00V)	100,00% (400,00V)	10,00% (40,00V)	100,00% (400,00V)
.032	ULL << on	U_{THR} ON	%Unom /VUnom	85,00% (340,00V)	50,00% (200,00V)	100,00% (400,00V)	10,00% (40,00V)	100,00% (400,00V)
.033	T ULL <<	Time OFF		100 ms	100 ms	5000 ms	100 ms	300000 ms
Only active for:		Connection Modes: 3-wire, 4-wire (LN+LL)						

Overvoltage2 Line to Neutral					Conformity Range		Possible Range	
ID				Default	Min	Max	Min	Max
.034	ULN >>	Enable function		off	on / off		on / off	
.035	ULN >> off	U_{THR} OFF	%Unom /VUnom	120,00% (276,00V)	100,00% (230,00V)	130,00% (299,00V)	100,00% (230,00V)	135,00% (310,50V)
.036	ULN >> on	U_{THR} ON	%Unom /VUnom	109,00% (250,70V)	100,00% (230,00V)	120,00% (276,00V)	100,00% (230,00V)	135,00% (310,50V)
.037	T ULN >>	Time OFF		100 ms	100 ms	5000 ms	100 ms	300000 ms
Only active for:		Connection Modes: 2-wire, 4-wire (LN), 4-wire (LN+LL)						

Undervoltage2 Line to Neutral					Conformity Range		Possible Range	
ID				Default	Min	Max	Min	Max
.038	ULN <<	Enable function		off	on / off		on / off	
.039	ULN << off	U_{THR} OFF	%Unom /VUnom	30,00% (69,00V)	20,00% (46,00V)	100,00% (230,00V)	10,00% (23,00V)	100,00% (230,00V)
.040	ULN << on	U_{THR} ON	%Unom /VUnom	85,00% (195,50V)	50,00% (115,00V)	100,00% (230,00V)	10,00% (23,00V)	100,00% (230,00V)
.041	T ULN <<	Time OFF		100 ms	100 ms	5000 ms	100 ms	300000 ms
Only active for:		Connection Modes: 2-wire, 4-wire (LN), 4-wire (LN+LL)						

Zero Voltage Line to Neutral					Conformity Range		Possible Range	
ID				Default	Min	Max	Min	Max
.115	Uzero >	Enable Function		off	on / off		on / off	
.116	Uzero> off	U_{THR} OFF	%Unom /VUnom	20,00% (46,00V)	1,00% (2,30V)	100,00% (230,00V)	1,00% (2,30V)	100,00% (230,00V)
.117	Uzero> on	U_{THR} ON	%Unom /VUnom	15,00% (34,50V)	1,00% (2,30V)	100,00% (230,00V)	1,00% (2,30V)	100,00% (230,00V)
.118	T Uzero >	Time OFF		1500 ms	200 ms	100000 ms	0 ms	300000 ms
Only active for:		Connection Modes: 4-wire (LN+LL)						

Residual Voltage (3 x Zero Voltage) Line to Neutral Activation of a narrower frequency window					Conformity Range		Possible Range	
ID				Default	Min	Max	Min	Max
.119	Ures-anfw>	Enable Function		off	on / off		on / off	
.120	U res > on	U_{THR} OFF	%Unom /VUnom	5,00% (11,50V)	2,00% (4,60V)	20,00% (46,00V)	2,00% (4,60V)	100,00% (230,00V)
.121	Ures > off	U_{THR} ON	%Unom /VUnom	3,00% (6,90V)	1,00% (2,30V)	20,00% (46,00V)	1,00% (2,30V)	100,00% (230,00V)
.122	T Ures >	Time OFF		200 ms	0 ms	240000 ms	0 ms	240000 ms
Only active for:		Connection Modes: 4-wire (LN+LL)						

Undervoltage LN (UY) Activation of a narrower frequency winw					Conformity Range		Possible Range	
ID				Default	Min	Max	Min	Max
.123	Uanfw <	Enable Function		off	on / off		on / off	
.124	Uanfw< on	U_{THR} OFF	%Unom /VUnom	85,00% (195,50V)	20,00% (46,00V)	100,00% (230,00V)	1,00% (2,30V)	100,00% (230,00V)
.125	Uanfw< off	U_{THR} ON	%Unom /VUnom	86,00% (197,80V)	21,00% (48,30V)	100,00% (230,00V)	2,00% (4,60V)	100,00% (230,00V)
.126	T Uanfw <	Time OFF		0 ms	0 ms	240000 ms	0 ms	240000 ms
Only active for:		Connection Modes: 4-wire (LN+LL)						

10 minutes average overvoltage					Conformity Range		Possible Range	
ID				Default	Min	Max	Min	Max
.042	Uavg	Enable function		off	on / off		on /off	
.043	Uavg off	U_{THR} OFF	%Unom /VUnom	110,00% (253,00V /440,00V)	100,00% (230,00V /400,00V)	115,00% (264,50V /460,00V)	100,00% (230,00V /400,00V)	135,00% (310,50V /540,00V)
.044	Uavg on	U_{THR} ON	%Unom /VUnom	109,00% (250,70V /436,00V)	100,00% (230,00V /400,00V)	115,00% (264,50V /460,00V)	100,00% (230,00V /400,00V)	135,00% (310,50V /540,00V)
.045	Uavg off t	Time OFF		50 ms	200 ms	10000 ms	100 ms	10000 ms

Overfrequency1				Conformity Range		Possible Range	
ID			Default	Min	Max	Min	Max
.054	f >	Enable function	on	on / off		on /off	
.055	f > off	f_{THR} OFF	50,200 Hz	50,000 Hz	52,000 Hz	50,000 Hz	55,000 Hz
.056	f > on	f_{THR} ON	50,100 Hz	50,000 Hz	52,000 Hz	50,000 Hz	55,000 Hz
.057	T f >	Time OFF	100 ms	100 ms	100000 ms	100 ms	300000 ms

Underfrequency1				Conformity Range		Possible Range	
ID			Default	Min	Max	Min	Max
.058	f <	Enable function	on	on / off		on / off	
.059	f < off	f_{THR} OFF	49,500 Hz	47,000 Hz	50,000 Hz	45,000 Hz	50,000 Hz
.060	f < on	f_{THR} ON	49,500 Hz	47,000 Hz	50,000 Hz	45,000 Hz	50,000 Hz
.061	T f <	Time OFF	100 ms	100 ms	100000 ms	100 ms	300000 ms

Overfrequency2				Conformity Range		Possible Range	
ID			Default	Min	Max	Min	Max
.062	f nw >	Enable function	off	on / off		on / off	
.063	f nw > off	f_{THR} OFF	50,300 Hz	50,000 Hz	52,000 Hz	50,000 Hz	55,000 Hz
.064	f nw > on	f_{THR} ON	50,100 Hz	50,000 Hz	52,000 Hz	50,000 Hz	55,000 Hz
.065	T f nw >	Time OFF	500 ms	100 ms	5000 ms	100 ms	300000 ms

Underfrequency2				Conformity Range		Possible Range	
ID			Default	Min	Max	Min	Max
.066	f nw <	Enable function	off	on / off		on / off	
.067	f nw < off	f_{THR} OFF	49,700 Hz	47,000 Hz	50,000 Hz	45,000 Hz	50,000 Hz
.068	f nw < on	f_{THR} ON	49,800 Hz	47,000 Hz	50,000 Hz	45,000 Hz	50,000 Hz
.069	T f nw <	Time OFF	500 ms	100 ms	5000 ms	100 ms	300000 ms

Frequency measuring in general				Conformity Range			
ID			Default	Min	Max		
.113	F wnd	Window length	100 ms	100 ms	100 ms		

Rate of Change of Frequency (RoCoF)			Conformity Range		Possible Range	
ID		Default	Min	Max	Min	Max

.090	ROCOF	Enable Function	off	on / off		on / off	
.091	ROCOF off	RoCoF$_{THR}$ OFF	1000 mHz/s	200 mHz/s	9990 mHz/s	100 mHz/s	9990 mHz/s
.092	ROCOF on	RoCoF$_{THR}$ ON	800 mHz/s	100 mHz/s	9990 mHz/s	100 mHz/s	9990 mHz/s
.093	T ROCOF	Time OFF	0 ms	0 ms	5000 ms	0 ms	5000 ms

Phase Shift (PShift)				Conformity Range		Possible Range	
ID			Default	Min	Max	Min	Max
.094	Pshift	Enable Function	off	on / off		on / off	
.095	Pshift off	PShift $_{THR}$ OFF	7,0 °	2,0 °	15,0 °	2,0 °	15,0 °
.096	Pshift on	PShift $_{THR}$ ON	5,0 °	1,0 °	15,0 °	1,0 °	15,0 °

Auxiliary Contact type				Conformity Range		Possible Range	
ID			Default	Min	Max	Min	Max
.099	Contact	Type	n.c. (normally closed)	n.o. (normally opened) n.c. (normally closed)		n.o. (normally opened) n.c. (normally closed) dis. (disabled)	
.100	T Contact	Time OFF	Fixed to 500 ms				
.114	I3 STOP	Type	n.o. (normally opened)	n.o. (normally opened) n.c. (normally closed) dis. (disabled)		n.o. (normally opened) n.c. (normally closed) dis. (disabled)	

Turn-on delay				Conformity Range		Possible Range	
ID			Default	Min	Max	Min	Max
.102	T on delay	Turn on time	60 s	10 s	600 s	0 s	900 s

Password					
ID			Default	Min	Max
.106	PW1	1st digit of Password	0	0	9

.107	PW2	2nd digit of Password	0	0	9
.108	PW3	3rd digit of Password	0	0	9
.109	PW4	4th digit of Password	0	0	9
Remark:		If all 4 digits of the Password are 0 (default setting) the Password request is skipped			

Errorlogic signalled (shown) on output relay R3. On = it is possible to detect this error Off = it is not possible to show this error on relay R3	
Overvoltage LL (UΔ)	off
Undervoltage LL (UΔ)	off
Overvoltage LN (UY)	off
Undervoltage LN (UY)	off
10-min overvoltage (Ū)	off
Overfrequency (f)	off
Underfrequency (f)	off
RoCoF (Rate of Change of Frequency) (Δf)	off
Phase shift (ΔΦ)	off
Remote shutdown / self-test (R)	off
Contactor feedback contact reports closed, although it should be open (C)	on
Contactor feedback contact reports open, although it should be closed (no error, only info) (c)	on

Device Information		
ID		
.105	SN: xxxxxxxxxx	xxxxxxxxxx = Device Serial Number
	SW: aa.dd.ccb	dd: Software version of Display Software aa: Software version of Measuring Software cc: Index of Configuration set b: Version of Configuration set

10.41 VDE 0126-1-1:2013 [ID 200]

Connection Mode			Conformity Range	Possible Range
ID		Default		
.003	Connection	Fixed to 4-wire (LN+LL)		

Nominal Voltage					Conformity Range		Possible Range	
ID				Default	Min	Max	Min	Max
.005	ULN/LL nom	Unom Y Unom Δ	V V	Fixed to 230.0 / 400.0				

Functional Safety			Conformity Range	Possible Range
ID		Default		
.007	Errtol	Fixed to 2ch		
Remark:		2ch means: 2 channel with functional safety and 2 auxilliary contacts necessary		

Overvoltage1 Line to Line					Conformity Range		Possible Range	
ID				Default	Min	Max	Min	Max
.011	ULLmax off	UTHR OFF	%Unom	115	115	115	100	135
.012	ULLmax on	UTHR ON	%Unom	110	110	110	100	135
		Time OFF	ms	Fixed to fastest possible disconnection				
Comment:		ULLmax on has a fixed offset of 0.5% UNOM subtracted from the displayed value						

Undervoltage1 Line to Line					Conformity Range		Possible Range	
ID				Default	Min	Max	Min	Max
.015	ULLmin off	UTHR OFF	% Unom	80	80	80	10	100
.016	ULLmin on	UTHR ON	%Unom	85	85	85	10	100
		Time OFF	ms	Fixed to fastest possible disconnection				
Comment:		ULLmin on has a fixed offset of 0.5% UNOM added to the displayed value						

Overvoltage1 Line to Neutral		Conformity Range		Possible Range	
ID	Default	Min	Max	Min	Max

.019	U >> off	U_{THR} OFF	%Unom	115	115	115	100	135
.020	U >> on	U_{THR} ON	%Unom	110	110	110	100	135
		Time OFF	ms	Fixed to fastest possible disconnection				
Comment:		U >> on has a fixed offset of 0.5% U_{NOM} subtracted from the displayed value						

Undervoltage1 Line to Neutral					Conformity Range		Possible Range	
ID				Default	Min	Max	Min	Max
.023	U < off	U_{THR} OFF	%Unom	80	80	80	10	100
.024	U < on	U_{THR} ON	%Unom	85	85	85	10	100
		Time OFF	ms	Fixed to fastest possible disconnection				
Comment:		U < on has a fixed offset of 0.5% U_{NOM} added to the displayed value						

10 minutes average overvoltage					Conformity Range		Possible Range	
ID				Default	Min	Max	Min	Max
.043	U>	U_{THR} OFF	%Unom	110	110	115	100	135
		U_{THR} ON	%Unom	Fixed Hysteresis (0.9% U_{NOM})				
		Time OFF	ms	Fixed to fastest possible disconnection				

Overfrequency1					Conformity Range		Possible Range	
ID				Default	Min	Max	Min	Max
.055	f > off	f_{THR} OFF	Hz	51.50	51.50	51.50	50.00	55.00
.056	F > on	f_{THR} ON	Hz	50.05	50.05	50.05	50.00	55.00
		Time OFF	ms	Fixed to fastest possible disconnection				

Underfrequency1					Conformity Range		Possible Range	
ID				Default	Min	Max	Min	Max
.059	f < off	f_{THR} OFF	Hz	47.50	47.50	47.50	45.00	50.00
.060	f < on	f_{THR} ON	ms	47.50	47.50	47.50	45.00	50.00
		Time OFF	ms	Fixed to fastest possible disconnection				
Comment:		f < on has a fixed offset of 0.025 Hz added to the displayed value						

Random overfrequency					Conformity Range		Possible Range	
ID				Default	Min	Max	Min	Max
.086	f> random	Enable function		off	on / off		on /off	
.087	f> random	f_{THR} OFF	Hz		50.20	51.50	50.20	51.50
		f_{THR} ON	Hz	Fixed reconnection frequency of 50.05Hz				
		Time OFF	ms	Fixed to fastest possible disconnection				
Comment:		The random f_{THR} OFF threshold is shown in .087 and cannot be edited						

Frequency measuring in general					Conformity Range		Possible Range	
ID				Default	Min	Max	Min	Max
.113	F wnd	Window length	ms	Fixed window length 100ms				

Auxiliary Contact type				Conformity Range		Possible Range	
ID			Default	Min	Max	Min	Max
.099	Contact	Type	n.c. (normally closed)	n.o. (normally opened) n.c. (normally closed)		n.o. (normally opened) n.c. (normally closed) dis. (disabled)	
.100	T Contact	Time OFF	ms	Fixed to 500ms			
.114	I3 STOP	Type	n.o. (normally opened)	n.o. (normally opened) n.c. (normally closed) dis. (disabled)		n.o. (normally opened) n.c. (normally closed) dis. (disabled)	

Turn-on delay					Conformity Range		Possible Range	
ID				Default	Min	Max	Min	Max
.102	Ton delay	Turn on time	s	60	60	60	0	900

Random Turn-on delay					Conformity Range		Possible Range	
ID				Default	Min	Max	Min	Max
.103	Ton random	Enable function		off	on / off		on / off	

.104	Ton random	Turn on time	s		60	600	60	600
Comment:		The random time value is shown in .104 and cannot be edited						

Password					
ID			Default	Min	Max
.106	PW1	1st digit of Password	0	0	9
.107	PW2	2nd digit of Password	0	0	9
.108	PW3	3rd digit of Password	0	0	9
.109	PW4	4th digit of Password	0	0	9
Remark:		If all 4 digits of the Password are 0 (default setting) the Password request is skipped			

Errorlogic signalled (shown) on output relay R3.

On = it is possible to detect this error

Off = it is not possible to show this error on relay R3

Overvoltage LL (UΔ)	off
Undervoltage LL (UΔ)	off
Overvoltage LN (UY)	off
Undervoltage LN (UY)	off
10-min overvoltage (Ū)	off
Overfrequency (f)	off
Underfrequency (f)	off
RoCoF (Rate of Change of Frequency) (Δf)	off
Phase shift (ΔΦ)	off
Remote shutdown / self-test (R)	off
Contactor feedback contact reports closed, although it should be open (C)	off
Contactor feedback contact reports open, although it should be closed (no error, only info) (c)	off

Device Information		
ID		
.105	ID: xxxxxxxxxx	xxxxxxxxxx = Device ID

	SW: aa.dd.ccb	dd: Software version of Display Software aa: Software version of Measuring Software cc: Index of Configuration set b: Version of Configuration set

10.42 Romania ANRE 2021 [ID 1300]

Connection Mode			Conformity Range	Possible Range
ID		Default		
.003	Connection	4-wire LN	4-wire LN	2-wire LN – 4-wire LL+LN

Nominal Voltage				Conformity Range		Possible Range	
ID			Default	Min	Max	Min	Max
.005	ULN/LL nom	Unom Y Unom Δ	230,00V /400,00V	57,50V /100,00V	230,00V /400,00V	28,75V /50,00V	241,50V /420,00V

Functional Safety			Conformity Range	Possible Range
ID		Default		
.007	Errtol	2ch	2ch, 1ch	2ch, 1ch
Remark:		2ch means: 2 channel with functional safety and 2 auxilliary contacts necessary 1ch means: 1 channel without functional safety and 1 auxilliary contact1 necessary		

Overvoltage1 Line to Neutral					Conformity Range		Possible Range	
ID				Default	Min	Max	Min	Max
.018	Ueff >	Enable function		on				
.019	Ueff > off	UTHR OFF	%Unom /VUnom	115,00% (264,50V)	100,00% (230,00V)	120,00% (276,00V)	100,00% (230,00V)	135,00% (310,50V)
.020	Ueff > on	UTHR ON	%Unom /VUnom	110,00% (253,00V)	100,00% (230,00V)	120,00% (276,00V)	100,00% (230,00V)	135,00% (310,50V)
.021	T Ueff >	Time OFF		500 ms	100 ms	5000 ms	100 ms	180000 ms
Only active for:		Connection Modes: 2-wire, 4-wire (LN), 4-wire (LN+LL)						

Undervoltage1 Line to Neutral					Conformity Range		Possible Range	
ID				Default	Min	Max	Min	Max
.022	0	Enable function		on				

.023	Ueff < off	U_{THR} OFF	%Unom /VUnom	85,00% (195,50V)	20,00% (46,00V)	100,00% (230,00V)	10,00% (23,00V)	100,00% (230,00V)
.024	Ueff < on	U_{THR} ON	%Unom /VUnom	90,00% (207,00V)	50,00% (115,00 V)	100,00% (230,00V)	10,00% (23,00V)	100,00% (230,00V)
.025	T Ueff <	Time OFF		3200 ms	100 ms	100000 ms	100 ms	180000 ms
Only active for:		Connection Modes: 2-wire, 4-wire (LN), 4-wire (LN+LL))						

10 minutes average overvoltage					Conformity Range		Possible Range	
ID				Default	Min	Max	Min	Max
.042	U10min	Enable function		on	on / off		on /off	
.043	U10min off	U_{THR} OFF	%Unom /VUnom	110,00% (253,00V /440,00V)	100,00% (230,00V /400,00V)	115,00% (264,50V /460,00V)	100,00% (230,00V /400,00V)	135,00% (310,50V /540,00V)

Overfrequency1				Conformity Range		Possible Range	
ID			Default	Min	Max	Min	Max
.054	f oA	Enable function	on				
.055	f > off	f_{THR} OFF	52,000 Hz	50,000 Hz	52,000 Hz	50,000 Hz	55,000 Hz
.056	f > on	f_{THR} ON	51,000 Hz	50,000 Hz	52,000 Hz	50,000 Hz	55,000 Hz
.057	T f >	Time OFF	500 ms	100 ms	100000 ms	100 ms	180000 ms

Underfrequency1				Conformity Range		Possible Range	
ID			Default	Min	Max	Min	Max
.058	f uA	Enable function	on				
.059	f < off	f_{THR} OFF	47,500 Hz	47,000 Hz	50,000 Hz	45,000 Hz	50,000 Hz
.060	f < on	f_{THR} ON	47,500 Hz	47,000 Hz	50,000 Hz	45,000 Hz	50,000 Hz
.061	T f <	Time OFF	500 ms	100 ms	100000 ms	100 ms	180000 ms

Frequency measuring in general				Conformity Range		Possible Range	
ID			Default	Min	Max	Min	Max
.113	F wnd	Window length	100 ms				

Auxiliary Contact type				Conformity Range		Possible Range	
ID			Default	Min	Max	Min	Max
.099	Contact	Type	(normally closed)	n.o. (normally opened) n.c. (disabled)		n.o. (normally opened) n.c. (normally closed) dis. (disabled)	
.100	T Contact	Time OFF	Fixed to 500 ms				
.114	I3 STOP	Type	n.o. (normally opened)	n.o. (normally opened) n.c. (normally closed) dis. (disabled)		n.o. (normally opened) n.c. (normally closed) dis. (disabled)	

Turn-on delay				Conformity Range		Possible Range	
ID			Default	Min	Max	Min	Max
.102	T on delay	Turn on time	900 s	0 s	900 s	0 s	900 s

Password					
ID			Default	Min	Max
.106	PW1	1st digit of Password	0	0	9
.107	PW2	2nd digit of Password	0	0	9
.108	PW3	3rd digit of Password	0	0	9
.109	PW4	4th digit of Password	0	0	9
Remark:		If all 4 digits of the Password are 0 (default setting) the Password request is skipped			

ErrorLogic	
Overvoltage LL (UΔ)	on
Undervoltage LL (UΔ)	on
Overvoltage LN (UY)	on
Undervoltage LN (UY)	on

10-min overvoltage (Ū)	on
Overfrequency (f)	on
underfrequency	on
RoCoF (Rate of Change of Frequency) (Δf)	on
phase shift	on
Remote shutdown / self-test (R)	on
Contactor feedback contact reports closed, although it should be open (C)	on
Contactor feedback contact reports open, although it should be closed (no error, only info) (c)	on

Device Information		
ID		
.105	SN: xxxxxxxxxx SW: aa.dd.ccb	xxxxxxxxxx = Device Serial Number dd: Software version of Display Software aa: Software version of Measuring Software cc: Index of Configuration set b: Version of Configuration set

10.43 AB AS 4777.2:2020 [ID 1110]

Connection Mode			Conformity Range	Possible Range
ID		Default		
.003	Connection	4-wire (LN)	4-wire (LN)	2-wire, 3-wire, 4-wire (LN), 4-wire (LN+LL)

Nominal Voltage					Conformity Range		Possible Range	
ID				Default	Min	Max	Min	Max
.005	ULN/LL nom	Unom Y	V	230.0	230.0	240.0	100.0	240.0
		Unom Δ	V	400.0	400.0	417.4	173.9	417.4

Functional Safety			Conformity Range	Possible Range
ID		Default		

.007	Errtol	Fixed to 2ch
Remark:		2ch means: 2 channel with functional safety and 2 auxilliary contacts necessary

Overvoltage1 Line to Neutral					Conformity Range		Possible Range	
ID				Default	Min	Max	Min	Max
.019	V> off	U_{THR} OFF	%Unom	115.2	115.2	115.2	100	135
.020	V> on	U_{THR} ON	%Unom	110	100	110	100	135
.021	T V>	Time OFF	ms	1000	1000	1900	50	300000

Undervoltage1 Line to Neutral					Conformity Range		Possible Range	
ID				Default	Min	Max	Min	Max
.023	V< off	U_{THR} OFF	%Unom	78.3	78.3	78.3	0	100
.024	V< on	U_{THR} ON	%Unom	89	89	100	0	100
.025	T V<	Time OFF	ms	10000	10000	10900	50	300000

Overvoltage2 Line to Neutral					Conformity Range		Possible Range	
ID				Default	Min	Max	Min	Max
.034	V>>	Enable function		off	on /off		on /off	
.035	V>> off	U_{THR} OFF	%Unom	119.6	119.6	119.6	100	135
.036	V>> on	U_{THR} ON	%Unom	110	100	110	100	135
.037	T V>>	Time OFF	ms	100	100	200	100	300000

Undervoltage2 Line to Neutral					Conformity Range		Possible Range	
ID				Default	Min	Max	Min	Max
.039	V<< off	U_{THR} OFF	%Unom	30.4	30.4	30.4	0	100
.040	V<< on	U_{THR} ON	%Unom	89	89	100	0	100
.041	T V<<	Time OFF	ms	1000	1000	1900	50	300000

10 minutes average overvoltage				Conformity Range		Possible Range	
ID			Default	Min	Max	Min	Max
.042	Uavg	Enable function	on	on / off		on /off	

.043	Uavg off	U_{THR} OFF	%Unom	112.2	106.1	112.2	100	135
.044	Uavg on	U_{THR} ON	%Unom	110	100	110	100	135
		Time OFF	ms	Fixed to fastest possible disconnection				

Overfrequency1					Conformity Range		Possible Range	
ID				Default	Min	Max	Min	Max
.055	F> off	f_{THR} OFF	Hz	52.00	52.00	52.00	50.00	55.00
.056	F> on	f_{THR} ON	Hz	50.15	50.00	50.15	50.00	55.00
.057	T F>	Time OFF	ms	100	100	200	100	300000

Underfrequency1					Conformity Range		Possible Range	
ID				Default	Min	Max	Min	Max
.059	F< off	f_{THR} OFF	Hz	47.00	47.00	47.00	40.00	50.00
.060	F< on	f_{THR} ON	Hz	47.50	47.50	50.00	40.00	50.00
.061	T F<	Time OFF	ms	1000	1000	1900	50	300000

Frequency measuring in general					Conformity Range		Possible Range	
ID				Default	Min	Max	Min	Max
.113	F wnd	Window length	ms	Fixed window length 100ms				

Rate of Change of Frequency (RoCoF)					Conformity Range		Possible Range	
ID				Default	Min	Max	Min	Max
.090	RoCoF	Enable Function		off	on / off		on / off	
.091	RoCoF off	$RoCoF_{THR}$ OFF	mHz/s	1000	10	9990	10	9990
.092	RoCoF on	$RoCoF_{THR}$ ON	mHz/s	950	10	9990	10	9990
.093	RoCoFDelay	Time OFF	ms	500	50	500	50	10000
.111	RoCoF wnd	Window length	ms	225	100	1000	100	1000

Phase Shift (PShift)					Conformity Range		Possible Range	
ID				Default	Min	Max	Min	Max
.094	PShift	Enable Function		off	on / off		on / off	

.095	PShift off	PShift THR OFF	°	8	1	8	1	15
.096	PShift on	PShift THR ON	°	6	1	7	1	15
.097	PShiftDel	Time OFF	ms	50	50	50	50	10000
.112	PShift wnd	Window length	ms	50	50	500	50	1000

Auxiliary Contact type				Conformity Range		Possible Range	
ID			Default	Min	Max	Min	Max
.099	Contact	Type	n.c. (normally closed)	n.o. (normally opened) n.c. (normally closed)		n.o. (normally opened) n.c. (normally closed) dis. (disabled)	
.100	T Contact	Time OFF	ms	Fixed to 500ms			
.114	I3 STOP	Type	n.o. (normally opened)	n.o. (normally opened) n.c. (normally closed) dis. (disabled)		n.o. (normally opened) n.c. (normally closed) dis. (disabled)	

Turn-on delay					Conformity Range		Possible Range	
ID				Default	Min	Max	Min	Max
.102	Ton delay	Turn on time	s	60	0	60	0	900

Password					
ID			Default	Min	Max
.106	PW1	1st digit of Password	0	0	9
.107	PW2	2nd digit of Password	0	0	9
.108	PW3	3rd digit of Password	0	0	9
.109	PW4	4th digit of Password	0	0	9
Remark:	If all 4 digits of the Password are 0 (default setting) the Password request is skipped				

Errorlogic signalled (shown) on output relay R3.

On = it is possible to detect this error

Off = it is not possible to show this error on relay R3

Overvoltage LL (UΔ)	on

Undervoltage LL (UΔ)	on
Overvoltage LN (UY)	on
Undervoltage LN (UY)	on
10-min overvoltage (Ū)	on
Overfrequency (f)	on
Underfrequency (f)	on
RoCoF (Rate of Change of Frequency) (Δf)	on
Phase shift (ΔΦ)	on
Remote shutdown / self-test (R)	off
Contactor feedback contact reports closed, although it should be open (C)	on
Contactor feedback contact reports open, although it should be closed (no error, only info) (c)	on

Device Information		
ID		
.105	ID: xxxxxxxxxx	xxxxxxxxxx = Device ID
	SW: aa.dd.ccb	dd: Software version of Display Software aa: Software version of Measuring Software cc: Index of Configuration set b: Version of Configuration set

10.44 C AS 4777.2:2020 [ID 1120]

Connection Mode			Conformity Range	Possible Range
ID		Default		
.003	Connection	4-wire (LN)	4-wire (LN)	2-wire, 3-wire, 4-wire (LN), 4-wire (LN+LL)

Nominal Voltage					Conformity Range		Possible Range	
ID				Default	Min	Max	Min	Max
.005	ULN/LL nom	Unom Y Unom Δ	V V	230.0 400.0	230.0 400.0	240.0 417.4	100.0 173.9	240.0 417.4

Functional Safety			Conformity Range	Possible Range
ID		Default		
.007	Errtol	Fixed to 2ch		
Remark:		2ch means: 2 channel with functional safety and 2 auxilliary contacts necessary		

Overvoltage1 Line to Neutral					Conformity Range		Possible Range	
ID				Default	Min	Max	Min	Max
.019	V> off	UTHR OFF	%Unom	115.2	115.2	115.2	100	135
.020	V> on	UTHR ON	%Unom	110	100	110	100	135
.021	T V>	Time OFF	ms	1000	1000	1900	50	300000

Undervoltage1 Line to Neutral					Conformity Range		Possible Range	
ID				Default	Min	Max	Min	Max
.023	V< off	UTHR OFF	%Unom	78.3	78.3	78.3	0	100
.024	V< on	UTHR ON	%Unom	89	89	100	0	100
.025	T V<	Time OFF	ms	10000	10000	10900	50	300000

Overvoltage2 Line to Neutral			Conformity Range		Possible Range	
ID		Default	Min	Max	Min	Max
.034	V>>	Enable function	off	on /off		on /off	

.035	V>> off	UTHR OFF	%Unom	119.6	119.6	119.6	100	135
.036	V>> on	UTHR ON	%Unom	110	100	110	100	135
.037	T V>>	Time OFF	ms	100	100	200	100	300000

Undervoltage2 Line to Neutral					Conformity Range		Possible Range	
ID				Default	Min	Max	Min	Max
.039	V<< off	UTHR OFF	%Unom	30.4	30.4	30.4	0	100
.040	V<< on	UTHR ON	%Unom	89	89	100	0	100
.041	T V<<	Time OFF	ms	1000	1000	1900	50	300000

10 minutes average overvoltage					Conformity Range		Possible Range	
ID				Default	Min	Max	Min	Max
.042	Uavg	Enable function		on	on / off		on /off	
.043	Uavg off	UTHR OFF	%Unom	112.2	106.1	112.2	100	135
.044	Uavg on	UTHR ON	%Unom	110	100	110	100	135
		Time OFF	ms	Fixed to fastest possible disconnection				

Overfrequency1					Conformity Range		Possible Range	
ID				Default	Min	Max	Min	Max
.055	F> off	fTHR OFF	Hz	55.00	55.00	55.00	50.00	55.00
.056	F> on	fTHR ON	Hz	50.15	50.00	50.15	50.00	55.00
.057	T F>	Time OFF	ms	100	100	200	100	300000

Underfrequency1					Conformity Range		Possible Range	
ID				Default	Min	Max	Min	Max
.059	F< off	fTHR OFF	Hz	45.00	45.00	45.00	40.00	50.00
.060	F< on	fTHR ON	Hz	47.50	47.50	50.00	40.00	50.00
.061	T F<	Time OFF	ms	5000	5000	5900	50	300000

Frequency measuring in general			Conformity Range		Possible Range	
ID		Default	Min	Max	Min	Max

.113	F wnd	Window length	ms	Fixed window length 100ms

Rate of Change of Frequency (RoCoF)					Conformity Range		Possible Range	
ID				Default	Min	Max	Min	Max
.090	RoCoF	Enable Function		off	on / off		on / off	
.091	RoCoF off	RoCoF$_{THR}$ OFF	mHz/s	1000	10	9990	10	9990
.092	RoCoF on	RoCoF$_{THR}$ ON	mHz/s	950	10	9990	10	9990
.093	RoCoFDelay	Time OFF	ms	500	50	500	50	10000
.111	RoCoF wnd	Window length	ms	225	100	1000	100	1000

Phase Shift (PShift)					Conformity Range		Possible Range	
ID				Default	Min	Max	Min	Max
.094	PShift	Enable Function		off	on / off		on / off	
.095	PShift off	PShift$_{THR}$ OFF	°	8	1	8	1	15
.096	PShift on	PShift$_{THR}$ ON	°	6	1	7	1	15
.097	PShiftDel	Time OFF	ms	50	50	50	50	10000
.112	PShift wnd	Window length	ms	50	50	500	50	1000

Auxiliary Contact type				Conformity Range		Possible Range	
ID			Default	Min	Max	Min	Max
.099	Contact	Type	n.c. (normally closed)	n.o. (normally opened) n.c. (normally closed)		n.o. (normally opened) n.c. (normally closed) dis. (disabled)	
.100	T Contact	Time OFF	ms	Fixed to 500ms			
.114	I3 STOP	Type	n.o. (normally opened)	n.o. (normally opened) n.c. (normally closed) dis. (disabled)		n.o. (normally opened) n.c. (normally closed) dis. (disabled)	

Turn-on delay	Conformity Range	Possible Range

ID				Default	Min	Max	Min	Max
.102	Ton delay	Turn on time	s	60	0	60	0	900

Password					
ID			Default	Min	Max
.106	PW1	1st digit of Password	0	0	9
.107	PW2	2nd digit of Password	0	0	9
.108	PW3	3rd digit of Password	0	0	9
.109	PW4	4th digit of Password	0	0	9
Remark:	If all 4 digits of the Password are 0 (default setting) the Password request is skipped				

Errorlogic signalled (shown) on output relay R3. On = it is possible to detect this error Off = it is not possible to show this error on relay R3	
Overvoltage LL (UΔ)	on
Undervoltage LL (UΔ)	on
Overvoltage LN (UY)	on
Undervoltage LN (UY)	on
10-min overvoltage (Ū)	on
Overfrequency (f)	on
Underfrequency (f)	on
RoCoF (Rate of Change of Frequency) (Δf)	on
Phase shift (ΔΦ)	on
Remote shutdown / self-test (R)	off
Contactor feedback contact reports closed, although it should be open (C)	on
Contactor feedback contact reports open, although it should be closed (no error, only info) (c)	on

Device Information		
ID		
.105	ID: xxxxxxxxxx	xxxxxxxxxx = Device ID

	SW: aa.dd.ccb	dd: Software version of Display Software aa: Software version of Measuring Software cc: Index of Configuration set b: Version of Configuration set

00. NZS 4777.2:2020 [ID 1130]

Connection Mode			Conformity Range	Possible Range
ID		Default		
.003	Connection	4-wire (LN)	4-wire (LN)	2-wire, 3-wire, 4-wire (LN), 4-wire (LN+LL)

Nominal Voltage					Conformity Range		Possible Range	
ID				Default	Min	Max	Min	Max
.005	ULN/LL nom	Unom Y	V	230.0	230.0	240.0	100.0	240.0
		Unom Δ	V	400.0	400.0	417.4	173.9	417.4

Functional Safety			Conformity Range	Possible Range
ID		Default		
.007	Errtol	Fixed to 2ch		
Remark:		2ch means: 2 channel with functional safety and 2 auxilliary contacts necessary		

Overvoltage1 Line to Neutral					Conformity Range		Possible Range	
ID				Default	Min	Max	Min	Max
.019	V> off	U_{THR} OFF	%Unom	115.2	115.2	115.2	100	135
.020	V> on	U_{THR} ON	%Unom	110	100	110	100	135
.021	T V>	Time OFF	ms	1000	1000	1900	50	300000

Undervoltage1 Line to Neutral					Conformity Range		Possible Range	
ID				Default	Min	Max	Min	Max
.023	V< off	U_{THR} OFF	%Unom	78.3	78.3	78.3	0	100
.024	V< on	U_{THR} ON	%Unom	89	89	100	0	100
.025	T V<	Time OFF	ms	10000	10000	10900	50	300000

Overvoltage2 Line to Neutral			Conformity Range		Possible Range	
ID		Default	Min	Max	Min	Max
.034	V>>	Enable function	off	on /off		on /off	

.035	V>> off	U_{THR} OFF	%Unom	119.6	119.6	119.6	100	135
.036	V>> on	U_{THR} ON	%Unom	110	100	110	100	135
.037	T V>>	Time OFF	ms	100	100	200	100	300000

Undervoltage2 Line to Neutral					Conformity Range		Possible Range	
ID				Default	Min	Max	Min	Max
.039	V<< off	U_{THR} OFF	%Unom	30.4	30.4	30.4	0	100
.040	V<< on	U_{THR} ON	%Unom	89	89	100	0	100
.041	T V<<	Time OFF	ms	1000	1000	1900	50	300000

10 minutes average overvoltage					Conformity Range		Possible Range	
ID				Default	Min	Max	Min	Max
.042	Uavg	Enable function		on	on / off		on /off	
.043	Uavg off	U_{THR} OFF	%Unom	108.3	106.1	112.2	100	135
.044	Uavg on	U_{THR} ON	%Unom	106.1	100	110	100	135
		Time OFF	ms	Fixed to fastest possible disconnection				

Overfrequency1					Conformity Range		Possible Range	
ID				Default	Min	Max	Min	Max
.055	F> off	f_{THR} OFF	Hz	55.00	55.00	55.00	50.00	55.00
.056	F> on	f_{THR} ON	Hz	50.15	50.00	50.15	50.00	55.00
.057	T F>	Time OFF	ms	100	100	200	100	300000

Underfrequency1					Conformity Range		Possible Range	
ID				Default	Min	Max	Min	Max
.059	F< off	f_{THR} OFF	Hz	45.00	45.00	45.00	40.00	50.00
.060	F< on	f_{THR} ON	Hz	47.50	47.50	50.00	40.00	50.00
.061	T F<	Time OFF	ms	1000	1000	1900	50	300000

Frequency measuring in general			Conformity Range		Possible Range	
ID		Default	Min	Max	Min	Max

.113	F wnd	Window length	ms	Fixed window length 100ms

Rate of Change of Frequency (RoCoF)					Conformity Range		Possible Range	
ID				Default	Min	Max	Min	Max
.090	RoCoF	Enable Function		off	on / off		on / off	
.091	RoCoF off	RoCoFTHR OFF	mHz/s	1000	10	9990	10	9990
.092	RoCoF on	RoCoFTHR ON	mHz/s	950	10	9990	10	9990
.093	RoCoFDelay	Time OFF	ms	500	50	500	50	10000
.111	RoCoF wnd	Window length	ms	225	100	1000	100	1000

Phase Shift (PShift)					Conformity Range		Possible Range	
ID				Default	Min	Max	Min	Max
.094	PShift	Enable Function		off	on / off		on / off	
.095	PShift off	PShift THR OFF	°	8	1	8	1	15
.096	PShift on	PShift THR ON	°	6	1	7	1	15
.097	PShiftDel	Time OFF	ms	50	50	50	50	10000
.112	PShift wnd	Window length	ms	50	50	500	50	1000

Auxiliary Contact type					Conformity Range		Possible Range	
ID				Default	Min	Max	Min	Max
.099	Contact	Type		n.c. (normally closed)	n.o. (normally opened) n.c. (normally closed)		n.o. (normally opened) n.c. (normally closed) dis. (disabled)	
.100	T Contact	Time OFF	ms	Fixed to 500ms				
.114	I3 STOP	Type		n.o. (normally opened)	n.o. (normally opened) n.c. (normally closed) dis. (disabled)		n.o. (normally opened) n.c. (normally closed) dis. (disabled)	

Turn-on delay	Conformity Range	Possible Range

ID				Default	Min	Max	Min	Max
.102	Ton delay	Turn on time	s	60	0	60	0	900

Password					
ID			Default	Min	Max
.106	PW1	1st digit of Password	0	0	9
.107	PW2	2nd digit of Password	0	0	9
.108	PW3	3rd digit of Password	0	0	9
.109	PW4	4th digit of Password	0	0	9
Remark:		If all 4 digits of the Password are 0 (default setting) the Password request is skipped			

Errorlogic signalled (shown) on output relay R3. On = it is possible to detect this error Off = it is not possible to show this error on relay R3	
Overvoltage LL (UΔ)	on
Undervoltage LL (UΔ)	on
Overvoltage LN (UY)	on
Undervoltage LN (UY)	on
10-min overvoltage (Ū)	on
Overfrequency (f)	on
Underfrequency (f)	on
RoCoF (Rate of Change of Frequency) (Δf)	on
Phase shift (ΔΦ)	on
Remote shutdown / self-test (R)	off
Contactor feedback contact reports closed, although it should be open (C)	on
Contactor feedback contact reports open, although it should be closed (no error, only info) (c)	on

Device Information		
ID		
.105	ID: xxxxxxxxxx	xxxxxxxxxx = Device ID

	SW: aa.dd.ccb	dd: Software version of Display Software aa: Software version of Measuring Software cc: Index of Configuration set b: Version of Configuration set

10.45 NSW-Augrid 23 [ID 1135]

Connection Mode			Conformity Range	Possible Range
ID		Default		
.003	Connection	4-wire LL+LN	4-wire LN - 4-wire LL+LN	2-wire LN - 4-wire LL+LN

Nominal Voltage				Conformity Range		Possible Range	
ID			Default	Min	Max	Min	Max
.005	ULN/LL nom	Unom Y Unom Δ	240,01V/ 417,40V	230,00V /400,00V	240,01V /417,40V	99,99V /173,90V	240,01V /417,40V

Functional Safety			Conformity Range	Possible Range
ID		Default		
.007	Errtol	2ch	2ch, 1ch	2ch, 1ch
Remark:		2ch means: 2 channel with functional safety and 2 auxilliary contacts necessary 1ch means: 1 channel without functional safety and 1 auxilliary contact1 necessary		

Overvoltage1 Line to Line					Conformity Range		Possible Range	
ID				Default	Min	Max	Min	Max
.010	VLL>	Enable function		on	on / off		on /off	
.011	VLL> off	UTHR OFF	%Unom /VUnom	108,00% (450,79V)	108,00 % (450,79 V)	108,00% (450,79V)	100,00% (417,40V)	135,00% (563,49V)
.012	VLL> on	UTHR ON	%Unom /VUnom	105,00% (438,27V)	105,00 % (438,27 V)	105,00% (438,27V)	100,00% (417,40V)	135,00% (563,49V)
.013	T VLL>	Time OFF		2000 ms	2000 ms	2000 ms	50 ms	300000 ms
Only active for:		Connection Modes: 3-wire, 4-wire (LN+LL)						

Undervoltage1 Line to Line			Conformity Range		Possible Range	
ID		Default	Min	Max	Min	Max

.014	VLL<	Enable function		on	on / off		on /off	
.015	VLL< off	UTHR OFF	%Unom /VUnom	75,00% (313,05V)	75,00% (313,05V)	75,00% (313,05V)	0,00% (0,00V)	100,00% (417,40V)
.016	VLL< on	UTHR ON	%Unom /VUnom	78,00% (325,57V)	78,00% (325,57V)	78,00% (325,57V)	0,00% (0,00V)	100,00% (417,40V)
.017	T VLL<	Time OFF		2000 ms	2000 ms	2000 ms	50 ms	300000 ms
Only active for:		Connection Modes: 3-wire, 4-wire (LN+LL)						

Overvoltage1 Line to Neutral					Conformity Range		Possible Range	
ID				Default	Min	Max	Min	Max
.019	V> off	UTHR OFF	%Unom /VUnom	108,00% (259,21V)	108,00% (259,21V)	108,00% (259,21V)	100,00% (240,01V)	135,00% (324,01V)
.020	V> on	UTHR ON	%Unom /VUnom	105,00% (252,01V)	105,00% (252,01V)	105,00% (252,01V)	100,00% (240,01V)	135,00% (324,01V)
.021	T V>	Time OFF		2000 ms	2000 ms	2000 ms	50 ms	300000 ms
Only active for:		Connection Modes: 2-wire, 4-wire (LN), 4-wire (LN+LL)						

Undervoltage1 Line to Neutral					Conformity Range		Possible Range	
ID				Default	Min	Max	Min	Max
.023	V< off	UTHR OFF	%Unom /VUnom	75,00% (180,00V)	75,00% (180,00V)	75,00% (180,00V)	0,00% (0,00V)	100,00% (240,01V)
.024	V< on	UTHR ON	%Unom /VUnom	78,00% (187,20V)	78,00% (187,20V)	78,00% (187,20V)	0,00% (0,00V)	100,00% (240,01V)
.025	T V<	Time OFF		2000 ms	2000 ms	2000 ms	50 ms	300000 ms
Only active for:		Connection Modes: 2-wire, 4-wire (LN), 4-wire (LN+LL))						

Zero Voltage Line to Neutral					Conformity Range		Possible Range	
ID				Default	Min	Max	Min	Max

.115	Uzero >	Enable Function		off	on / off		on / off	
.116	Uzero> off	U_{THR} OFF	%Unom /VUnom	20,00% (48,00V)	20,00% (48,00V)	20,00% (48,00V)	1,00% (2,40V)	100,00% (240,01V)
.117	Uzero> on	U_{THR} ON	%Unom /VUnom	15,00% (36,00V)	15,00% (36,00V)	15,00% (36,00V)	1,00% (2,40V)	100,00% (240,01V)
.118	T Uzero>	Time OFF		1500 ms	1500 ms	1500 ms	0 ms	300000 ms
Only active for:		Connection Modes: 4-wire (LN+LL)						

10 minutes average overvoltage					Conformity Range		Possible Range	
ID				Default	Min	Max	Min	Max
.042	Uavg	Enable function		on	on / off		on /off	
.043	Uavg off	U_{THR} OFF	%Unom /VUnom	107,00% (256,81V /446,62V)	107,00% (256,81V /446,62V)	107,00% (256,81V /446,62V)	100,00% (240,01V /417,40V)	135,00% (324,01V /563,49V)
.044	Uavg on	U_{THR} ON	%Unom /VUnom	105,00% (252,01V /438,27V)	105,00% (252,01V /438,27V)	105,00% (252,01V /438,27V)	100,00% (240,01V /417,40V)	135,00% (324,01V /563,49V)

Overfrequency1				Conformity Range		Possible Range	
ID			Default	Min	Max	Min	Max
.055	F> off	f_{THR} OFF	52,000 Hz	52,000 Hz	52,000 Hz	50,000 Hz	55,000 Hz
.056	F> on	f_{THR} ON	51,900 Hz	51,900 Hz	51,900 Hz	50,000 Hz	55,000 Hz
.057	T F>	Time OFF	2000 ms	2000 ms	2000 ms	100 ms	300000 ms

Underfrequency1				Conformity Range		Possible Range	
ID			Default	Min	Max	Min	Max
.059	F< off	f_{THR} OFF	47,000 Hz	47,000 Hz	47,000 Hz	40,000 Hz	50,000 Hz
.060	F< on	f_{THR} ON	47,500 Hz	47,500 Hz	47,500 Hz	40,000 Hz	50,000 Hz

.061	T F<	Time OFF	2000 ms	2000 ms	2000 ms	100 ms	300000 ms

Frequency measuring in general				Conformity Range			
ID			Default	Min	Max		
.113	F wnd	Window length	100 ms	100 ms	100 ms		

Rate of Change of Frequency (RoCoF)				Conformity Range		Possible Range	
ID			Default	Min	Max	Min	Max
.090	RoCoF	En Function	on	on / off		on / off	
.091	RoCoF off	RoCoF$_{THR}$ OFF	4000 mHz/s	4000 mHz/s	4000 mHz/s	10 mHz/s	5000 mHz/s
.092	RoCoF on	RoCoF$_{THR}$ ON	3950 mHz/s	3950 mHz/s	3950 mHz/s	10 mHz/s	4950 mHz/s
.093	RoCoFDelay	Time OFF	100 ms	100 ms	100 ms	100 ms	10000 ms
.111	RoCoF wnd	Window length	225 ms	100 ms	1000 ms	100 ms	1000 ms

Phase Shift (PShift)				Conformity Range		Possible Range	
ID			Default	Min	Max	Min	Max
.094	PShift	Enable Function	on	on / off		on / off	
.095	PShift off	PShift $_{THR}$ OFF	20,0 °	20,0 °	20,0 °	1,0 °	25,0 °
.096	Pshift on	PShift $_{THR}$ ON	18,0 °	17,0 °	17,0 °	1,0 °	24,0 °
.097	PshiftDel	Time OFF	50 ms	50 ms	50 ms	50 ms	10000 ms
.112	PShift wnd	Window length	50 ms	50 ms	500 ms	50 ms	1000 ms

Auxiliary Contact type				Conformity Range		Possible Range	
ID			Default	Min	Max	Min	Max
.099	Contact	Type	n.c. (normally closed)	n.o. (normally opened) n.c. (normally closed)		n.o. (normally opened) n.c. (normally closed) dis. (disabled)	
.100	T Contact	Time OFF	Fixed to 500 ms				

.114	I3 STOP	Type	n.o. (normally opened)	n.o. (normally opened) n.c. (normally closed)	n.o. (normally opened) n.c. (normally closed) dis. (disabled)

Turn-on delay				Conformity Range		Possible Range	
ID			Default	Min	Max	Min	Max
.102	T on delay	Turn on time	60 s	0 s	60 s	0 s	900 s

Password					
ID			Default	Min	Max
.106	PW1	1st digit of Password	0	0	9
.107	PW2	2nd digit of Password	0	0	9
.108	PW3	3rd digit of Password	0	0	9
.109	PW4	4th digit of Password	0	0	9
Remark:	If all 4 digits of the Password are 0 (default setting) the Password request is skipped				

Errorlogic signalled (shown) on output relay R3. On = it is possible to detect this error Off = it is not possible to show this error on relay R3	
Overvoltage LL (UΔ)	on
Undervoltage LL (UΔ)	on
Overvoltage LN (UY)	on
Undervoltage LN (UY)	on
10-min overvoltage (Ū)	on
Overfrequency (f)	on
Underfrequency (f)	on
RoCoF (Rate of Change of Frequency) (Δf)	on
Phase shift (ΔΦ)	on
Remote shutdown / self-test (R)	off
Contactor feedback contact reports closed, although it should be open (C)	on
Contactor feedback contact reports open, although it should be closed (no error, only info) (c)	on

Device Information		
ID		
.105	SN: xxxxxxxxxx	xxxxxxxxxx = Device Serial Number
	SW: aa.dd.ccb	dd: Software version of Display Software aa: Software version of Measuring Software cc: Index of Configuration set b: Version of Configuration set

10.46 NSW-Essential 23 [ID 1140]

Connection Mode			Conformity Range	Possible Range
ID		Default		
.003	Connection	4-wire LL+LN	4-wire LN - 4-wire LL+LN	2-wire LN - 4-wire LL+LN

Nominal Voltage				Conformity Range		Possible Range	
ID			Default	Min	Max	Min	Max
.005	ULN/LL nom	Unom Y Unom Δ	240,01V /417,40V	230,00V /400,00V	240,01V /417,40V	99,99V /173,90V	240,01V /417,40V

Functional Safety			Conformity Range	Possible Range
ID		Default		
.007	Errtol	2ch	2ch, 1ch	2ch, 1ch
Remark:		2ch means: 2 channel with functional safety and 2 auxilliary contacts necessary 1ch means: 1 channel without functional safety and 1 auxilliary contact1 necessary		

Overvoltage1 Line to Line					Conformity Range		Possible Range	
ID				Default	Min	Max	Min	Max
.010	VLL>	Enable function		on	on / off		on / off	
.011	VLL> off	UTHR OFF	%Unom /VUnom	108,00% (450,79V)	108,00% (450,79V)	108,00% (450,79V)	100,00% (417,40V)	135,00% (563,49V)
.012	VLL> on	UTHR ON	%Unom /VUnom	105,00% (438,27V)	105,00% (438,27V)	105,00% (438,27V)	100,00% (417,40V)	135,00% (563,49V)
.013	T VLL>	Time OFF		2000 ms	2000 ms	2000 ms	50 ms	300000 ms
Only active for:		Connection Modes: 3-wire, 4-wire (LN+LL)						

Undervoltage1 Line to Line		Default	Conformity Range		Possible Range	
ID		Default	Min	Max	Min	Max

.014	VLL<	Enable function		on	on / off		on / off	
.015	VLL< off	UTHR OFF	%Unom /VUnom	75,00% (313,05V)	75,00% (313,05V)	75,00% (313,05V)	0,00% (0,00V)	100,00% (417,40V)
.016	VLL< on	UTHR ON	%Unom /VUnom	78,00% (325,57V)	78,00% (325,57V)	78,00% (325,57V)	0,00% (0,00V)	100,00% (417,40V)
.017	T VLL<	Time OFF		2000 ms	2000 ms	2000 ms	50 ms	300000 ms
Only active for:		Connection Modes: 3-wire, 4-wire (LN+LL)						

Overvoltage1 Line to Neutral					Conformity Range		Possible Range	
ID				Default	Min	Max	Min	Max
.019	V> off	UTHR OFF	%Unom /VUnom	108,00% (259,21V)	108,00% (259,21V)	108,00% (259,21V)	100,00% (240,01V)	135,00% (324,01V)
.020	V> on	UTHR ON	%Unom /VUnom	105,00% (252,01V)	110,00% (264,01V)	110,00% (264,01V)	100,00% (240,01V)	135,00% (324,01V)
.021	T V>	Time OFF		2000 ms	2000 ms	2000 ms	50 ms	300000 ms
Only active for:		Connection Modes: 2-wire, 4-wire (LN), 4-wire (LN+LL)						

Undervoltage1 Line to Neutral					Conformity Range		Possible Range	
ID				Default	Min	Max	Min	Max
.023	V< off	UTHR OFF	%Unom /VUnom	75,00% (180,00V)	75,00% (180,00V)	75,00% (180,00V)	0,00% (0,00V)	100,00% (240,01V)
.024	V< on	UTHR ON	%Unom /VUnom	78,00% (187,20V)	78,00% (187,20V)	78,00% (187,20V)	0,00% (0,00V)	100,00% (240,01V)
.025	T V<	Time OFF		2000 ms	2000 ms	2000 ms	50 ms	300000 ms
Only active for:		Connection Modes: 2-wire, 4-wire (LN), 4-wire (LN+LL))						

Zero Voltage Line to Neutral					Conformity Range		Possible Range	
ID				Default	Min	Max	Min	Max

.115	Uzero>	Enable Function		off	on / off		on / off	
.116	Uzero> off	U_{THR} OFF	%Unom /VUnom	20,00% (48,00V)	20,00% (48,00V)	20,00% (48,00V)	1,00% (2,40V)	100,00% (240,01V)
.117	Uzero> on	U_{THR} ON	%Unom /VUnom	15,00% (36,00V)	15,00% (36,00V)	15,00% (36,00V)	1,00% (2,40V)	100,00% (240,01V)
.118	T Uzero>	Time OFF		1500 ms	1500 ms	1500 ms	0 ms	300000 ms
Only active for:		Connection Modes: 4-wire (LN+LL)						

10 minutes average overvoltage					Conformity Range		Possible Range	
ID				Default	Min	Max	Min	Max
.042	Uavg	Enable function		on	on / off		on / off	
.043	Uavg off	U_{THR} OFF	%Unom /VUnom	106,00% (254,41V /442,44V)	106,00% (254,41V /442,44V)	106,00% (254,41V /442,44V)	100,00% (240,01V /417,40V)	135,00% (324,01V /563,49V)
.044	Uavg on	U_{THR} ON	%Unom /VUnom	104,00% (249,61V /434,10V)	104,00% (249,61V /434,10V)	104,00% (249,61V /434,10V)	100,00% (240,01V /417,40V)	135,00% (324,01V /563,49V)

Overfrequency1				Conformity Range		Possible Range	
ID			Default	Min	Max	Min	Max
.055	F> off	f_{THR} OFF	52,000 Hz	52,000 Hz	52,000 Hz	50,000 Hz	55,000 Hz
.056	F> on	f_{THR} ON	51,900 Hz	51,900 Hz	51,900 Hz	50,000 Hz	55,000 Hz
.057	T F>	Time OFF	2000 ms	2000 ms	2000 ms	100 ms	300000 ms

Underfrequency1				Conformity Range		Possible Range	
ID			Default	Min	Max	Min	Max
.059	F< off	f_{THR} OFF	47,000 Hz	47,000 Hz	47,000 Hz	40,000 Hz	50,000 Hz
.060	F< on	f_{THR} ON	47,500 Hz	47,500 Hz	47,500 Hz	40,000 Hz	50,000 Hz

.061	T F<	Time OFF	2000 ms	2000 ms	2000 ms	100 ms	300000 ms

Frequency measuring in general				Conformity Range			
ID			Default	Min	Max		
.113	F wnd	Window length	100 ms	100 ms	100 ms		

Rate of Change of Frequency (RoCoF)				Conformity Range		Possible Range	
ID			Default	Min	Max	Min	Max
.090	RoCoF	En Function	on	on / off		on / off	
.091	RoCoF off	RoCoF$_{THR}$ OFF	1000 mHz/s	1000 mHz/s	1000 mHz/s	10 mHz/s	5000 mHz/s
.092	RoCoF on	RoCoF$_{THR}$ ON	950 mHz/s	950 mHz/s	950 mHz/s	10 mHz/s	4950 mHz/s
.093	RoCoFDelay	Time OFF	850 ms	850 ms	850 ms	100 ms	10000 ms
.111	RoCoF wnd	Window length	225 ms	100 ms	1000 ms	100 ms	1000 ms

Phase Shift (PShift)				Conformity Range		Possible Range	
ID			Default	Min	Max	Min	Max
.094	PShift	Enable Function	on	on / off		on / off	
.095	PShift off	PShift $_{THR}$ OFF	8,0 °	8,0 °	8,0 °	1,0 °	25,0 °
.096	Pshift on	PShift $_{THR}$ ON	6,0 °	6,0 °	6,0 °	1,0 °	24,0 °
.097	PshiftDel	Time OFF	50 ms	50 ms	50 ms	50 ms	10000 ms
.112	PShift wnd	Window length	50 ms	50 ms	500 ms	50 ms	1000 ms

Auxiliary Contact type				Conformity Range		Possible Range	
ID			Default	Min	Max	Min	Max
.099	Contact	Type	n.c. (normally closed)	n.o. (normally opened) n.c. (normally closed)		n.o. (normally opened) n.c. (normally closed) dis. (disabled)	
.100	T Contact	Time OFF	Fixed to 500 ms				

.114	I3 STOP	Type	n.o. (normally opened)	n.o. (normally opened) n.c. (normally closed)	n.o. (normally opened) n.c. (normally closed) dis. (disabled)

Turn-on delay				Conformity Range		Possible Range	
ID			Default	Min	Max	Min	Max
.102	T on delay	Turn on time	60 s	0 s	60 s	0 s	900 s

Password					
ID			Default	Min	Max
.106	PW1	1st digit of Password	0	0	9
.107	PW2	2nd digit of Password	0	0	9
.108	PW3	3rd digit of Password	0	0	9
.109	PW4	4th digit of Password	0	0	9
Remark:		If all 4 digits of the Password are 0 (default setting) the Password request is skipped			

Errorlogic signalled (shown) on output relay R3. On = it is possible to detect this error Off = it is not possible to show this error on relay R3	
Overvoltage LL (UΔ)	on
Undervoltage LL (UΔ)	on
Overvoltage LN (UY)	on
Undervoltage LN (UY)	on
10-min overvoltage (Ū)	on
Overfrequency (f)	on
Underfrequency (f)	on
RoCoF (Rate of Change of Frequency) (Δf)	on
Phase shift (ΔΦ)	on
Remote shutdown / self-test (R)	off
Contactor feedback contact reports closed, although it should be open (C)	on
Contactor feedback contact reports open, although it should be closed (no error, only info) (c)	on

Device Information		
ID		
.105	SN: xxxxxxxxxx	xxxxxxxxxx = Device Serial Number
	SW: aa.dd.ccb	dd: Software version of Display Software aa: Software version of Measuring Software cc: Index of Configuration set b: Version of Configuration set

10.47 NSW-Endeavour 23 [ID 1145]

Connection Mode			Conformity Range	Possible Range
ID		Default		
.003	Connection	4-wire LL+LN	4-wire LN - 4-wire LL+LN	2-wire LN - 4-wire LL+LN

Nominal Voltage				Conformity Range		Possible Range	
ID			Default	Min	Max	Min	Max
.005	ULN/LL nom	Unom Y Unom Δ	240,01V /417,40V	230,00V /400,00V	240,01V /417,40V	99,99V /173,90V	240,01V /417,40V

Functional Safety			Conformity Range	Possible Range
ID		Default		
.007	Errtol	2ch	2ch, 1ch	2ch, 1ch
Remark:		2ch means: 2 channel with functional safety and 2 auxilliary contacts necessary 1ch means: 1 channel without functional safety and 1 auxilliary contact1 necessary		

Overvoltage1 Line to Line					Conformity Range		Possible Range	
ID				Default	Min	Max	Min	Max
.010	VLL>	Enable function		on	on / off		on / off	
.011	VLL> off	UTHR OFF	%Unom /VUnom	108,00% (450,79V)	108,00% (450,79V)	108,00% (450,79V)	100,00% (417,40V)	135,00% (563,49V)
.012	VLL> on	UTHR ON	%Unom /VUnom	105,00% (438,27V)	105,00% (438,27V)	105,00% (438,27V)	100,00% (417,40V)	135,00% (563,49V)
.013	T VLL>	Time OFF		2000 ms	2000 ms	2000 ms	50 ms	300000 ms
Only active for:		Connection Modes: 3-wire, 4-wire (LN+LL)						

Undervoltage1 Line to Line		Conformity Range		Possible Range	
ID	Default	Min	Max	Min	Max

.014	VLL<	Enable function		on	on / off		on / off	
.015	VLL< off	UTHR OFF	%Unom /VUnom	75,00% (313,05V)	75,00% (313,05V)	75,00% (313,05V)	0,00% (0,00V)	100,00% (417,40V)
.016	VLL< on	UTHR ON	%Unom /VUnom	78,00% (325,57V)	78,00% (325,57V)	78,00% (325,57V)	0,00% (0,00V)	100,00% (417,40V)
.017	T VLL<	Time OFF		2000 ms	2000 ms	2000 ms	50 ms	300000 ms
Only active for:		Connection Modes: 3-wire, 4-wire (LN+LL)						

Overvoltage1 Line to Neutral					Conformity Range		Possible Range	
ID				Default	Min	Max	Min	Max
.019	V> off	UTHR OFF	%Unom /VUnom	108,00% (259,21V)	108,00% (259,21V)	108,00% (259,21V)	100,00% (240,01V)	135,00% (324,01V)
.020	V> on	UTHR ON	%Unom /VUnom	105,00% (252,01V)	110,00% (264,01V)	110,00% (264,01V)	100,00% (240,01V)	135,00% (324,01V)
.021	T V>	Time OFF		2000 ms	2000 ms	2000 ms	50 ms	300000 ms
Only active for:		Connection Modes: 2-wire, 4-wire (LN), 4-wire (LN+LL)						

Undervoltage1 Line to Neutral					Conformity Range		Possible Range	
ID				Default	Min	Max	Min	Max
.023	V< off	UTHR OFF	%Unom /VUnom	75,00% (180,00V)	75,00% (180,00V)	75,00% (180,00V)	0,00% (0,00V)	100,00% (240,01V)
.024	V< on	UTHR ON	%Unom /VUnom	78,00% (187,20V)	78,00% (187,20V)	78,00% (187,20V)	0,00% (0,00V)	100,00% (240,01V)
.025	T V<	Time OFF		2000 ms	2000 ms	2000 ms	50 ms	300000 ms
Only active for:		Connection Modes: 2-wire, 4-wire (LN), 4-wire (LN+LL))						

Zero Voltage Line to Neutral			Conformity Range		Possible Range	
ID		Default	Min	Max	Min	Max

.115	Uzero>	Enable Function		off	on / off		on / off	
.116	Uzero> off	U_{THR} OFF	%Unom /VUnom	20,00% (48,00V)	20,00% (48,00V)	20,00% (48,00V)	1,00% (2,40V)	100,00% (240,01V)
.117	Uzero> on	U_{THR} ON	%Unom /VUnom	15,00% (36,00V)	15,00% (36,00V)	15,00% (36,00V)	1,00% (2,40V)	100,00% (240,01V)
.118	T Uzero>	Time OFF		1500 ms	1500 ms	1500 ms	0 ms	300000 ms
Only active for:		Connection Modes: 4-wire (LN+LL)						

Overfrequency1				Conformity Range		Possible Range	
ID			Default	Min	Max	Min	Max
.055	F> off	f_{THR} OFF	52,000 Hz	52,000 Hz	52,000 Hz	50,000 Hz	55,000 Hz
.056	F> on	f_{THR} ON	51,900 Hz	51,900 Hz	51,900 Hz	50,000 Hz	55,000 Hz
.057	T F>	Time OFF	2000 ms	2000 ms	2000 ms	100 ms	300000 ms

Underfrequency1				Conformity Range		Possible Range	
ID			Default	Min	Max	Min	Max
.059	F< off	f_{THR} OFF	47,000 Hz	47,000 Hz	47,000 Hz	40,000 Hz	50,000 Hz
.060	F< on	f_{THR} ON	47,500 Hz	47,500 Hz	47,500 Hz	40,000 Hz	50,000 Hz
.061	T F<	Time OFF	2000 ms	2000 ms	2000 ms	100 ms	300000 ms

Frequency measuring in general				Conformity Range			
ID			Default	Min	Max		
.113	F wnd	Window length	100 ms	100 ms	100 ms		

Rate of Change of Frequency (RoCoF)				Conformity Range		Possible Range	
ID			Default	Min	Max	Min	Max
.090	RoCoF	En Function	on	on / off		on / off	
.091	RoCoF off	RoCoF$_{THR}$ OFF	1000 mHz/s	1000 mHz/s	1000 mHz/s	10 mHz/s	5000 mHz/s

.092	RoCoF on	RoCoFTHR ON	950 mHz/s	950 mHz/s	950 mHz/s	10 mHz/s	4950 mHz/s
.093	RoCoFDelay	Time OFF	850 ms	850 ms	850 ms	100 ms	10000 ms
.111	RoCoF wnd	Window length	225 ms	100 ms	1000 ms	100 ms	1000 ms

Phase Shift (PShift)				Conformity Range		Possible Range	
ID			Default	Min	Max	Min	Max
.094	PShift	Enable Function	on	on / off		on / off	
.095	PShift off	PShift THR OFF	8,0 °	8,0 °	8,0 °	1,0 °	25,0 °
.096	Pshift on	PShift THR ON	6,0 °	6,0 °	6,0 °	1,0 °	24,0 °
.097	PshiftDel	Time OFF	50 ms	50 ms	50 ms	50 ms	10000 ms
.112	PShift wnd	Window length	50 ms	50 ms	500 ms	50 ms	1000 ms

Auxiliary Contact type				Conformity Range		Possible Range	
ID			Default	Min	Max	Min	Max
.099	Contact	Type	n.c. (normally closed)	n.o. (normally opened) n.c. (normally closed)		n.o. (normally opened) n.c. (normally closed) dis. (disabled)	
.100	T Contact	Time OFF	Fixed to 500 ms				
.114	I3 STOP	Type	n.o. (normally opened)	n.o. (normally opened) n.c. (normally closed)		n.o. (normally opened) n.c. (normally closed) dis. (disabled)	

Turn-on delay				Conformity Range		Possible Range	
ID			Default	Min	Max	Min	Max
.102	T on delay	Turn on time	60 s	0 s	60 s	0 s	900 s

Password					
ID			Default	Min	Max
.106	PW1	1st digit of Password	0	0	9

.107	PW2	2nd digit of Password	0	0	9
.108	PW3	3rd digit of Password	0	0	9
.109	PW4	4th digit of Password	0	0	9
Remark:		If all 4 digits of the Password are 0 (default setting) the Password request is skipped			

Errorlogic signalled (shown) on output relay R3. On = it is possible to detect this error Off = it is not possible to show this error on relay R3	
Overvoltage LL (UΔ)	on
Undervoltage LL (UΔ)	on
Overvoltage LN (UY)	on
Undervoltage LN (UY)	on
10-min overvoltage (Ū)	on
Overfrequency (f)	on
Underfrequency (f)	on
RoCoF (Rate of Change of Frequency) (Δf)	on
Phase shift (ΔΦ)	on
Remote shutdown / self-test (R)	off
Contactor feedback contact reports closed, although it should be open (C)	on
Contactor feedback contact reports open, although it should be closed (no error, only info) (c)	on

Device Information		
ID		
.105	SN: xxxxxxxxxx SW: aa.dd.ccb	xxxxxxxxxx = Device Serial Number dd: Software version of Display Software aa: Software version of Measuring Software cc: Index of Configuration set b: Version of Configuration set

10.48 VIC-United Energy 23 [ID 1150]

Connection Mode			Conformity Range	Possible Range
ID		Default		
.003	Connection	4-wire LL+LN	4-wire LN - 4-wire LL+LN	2-wire LN - 4-wire LL+LN

Nominal Voltage				Conformity Range		Possible Range	
ID			Default	Min	Max	Min	Max
.005	ULN/LL nom	Unom Y Unom Δ	240,01V /417,40V	230,00V /400,00V	240,01V /417,40V	99,99V /173,90V	240,01V /417,40V

Functional Safety			Conformity Range	Possible Range
ID		Default		
.007	Errtol	2ch	2ch, 1ch	2ch, 1ch
Remark:		2ch means: 2 channel with functional safety and 2 auxilliary contacts necessary 1ch means: 1 channel without functional safety and 1 auxilliary contact1 necessary		

Overvoltage1 Line to Line					Conformity Range		Possible Range	
ID				Default	Min	Max	Min	Max
.010	VLL>	Enable function		on	on / off		on / off	
.011	VLL> off	UTHR OFF	%Unom /VUnom	110,00% (459,14V)	110,00% (459,14V)	110,00% (459,14V)	100,00% (417,40V)	135,00% (563,49V)
.012	VLL> off	UTHR ON	%Unom /VUnom	107,00% (446,62V)	107,00% (446,62V)	107,00% (446,62V)	100,00% (417,40V)	135,00% (563,49V)
.013	T VLL>	Time OFF		2000 ms	2000 ms	2000 ms	50 ms	300000 ms
Only active for:		Connection Modes: 3-wire, 4-wire (LN+LL)						

Undervoltage1 Line to Line			Conformity Range		Possible Range	
ID		Default	Min	Max	Min	Max

.014	VLL<	Enable function		on				
.015	VLL< off	UTHR OFF	%Unom /VUnom	75,00% (313,05V)	75,00% (313,05V)	75,00% (313,05V)	0,00% (0,00V)	100,00% (417,40V)
.016	VLL< on	UTHR ON	%Unom /VUnom	78,00% (325,57V)	78,00% (325,57V)	78,00% (325,57V)	0,00% (0,00V)	100,00% (417,40V)
.017	T VLL<	Time OFF		11000 ms	11000 ms	11000 ms	50 ms	300000 ms
Only active for:		Connection Modes: 3-wire, 4-wire (LN+LL)						

Overvoltage1 Line to Neutral					Conformity Range		Possible Range	
ID				Default	Min	Max	Min	Max
.019	V> off	UTHR OFF	%Unom /VUnom	110,00% (264,01V)	110,00% (264,01V)	110,00% (264,01V)	100,00% (240,01V)	135,00% (324,01V)
.020	V> on	UTHR ON	%Unom /VUnom	107,00% (256,81V)	107,00% (256,81V)	107,00% (256,81V)	100,00% (240,01V)	135,00% (324,01V)
.021	T V>	Time OFF		2000 ms	2000 ms	2000 ms	50 ms	300000 ms
Only active for:		Connection Modes: 2-wire, 4-wire (LN), 4-wire (LN+LL)						

Undervoltage1 Line to Neutral					Conformity Range		Possible Range	
ID				Default	Min	Max	Min	Max
.023	V< off	UTHR OFF	%Unom /VUnom	75,00% (180,00V)	75,00% (180,00V)	75,00% (180,00V)	0,00% (0,00V)	100,00% (240,01V)
.024	V< on	UTHR ON	%Unom /VUnom	78,00% (187,20V)	78,00% (187,20V)	78,00% (187,20V)	0,00% (0,00V)	100,00% (240,01V)
.025	T V<	Time OFF		11000 ms	11000 ms	11000 ms	50 ms	300000 ms
Only active for:		Connection Modes: 2-wire, 4-wire (LN), 4-wire (LN+LL))						

Overvoltage2 Line to Line				Conformity Range		Possible Range	
ID			Default	Min	Max	Min	Max
.026	VLL>>	Enable function	on				

.027	VLL>> off	UTHR OFF	%Unom /VUnom	114,00% (475,84V)	114,00% (475,84V)	114,00% (475,84V)	100,00% (417,40V)	135,00% (563,49V)
.028	VLL>> on	UTHR ON	%Unom /VUnom	107,00% (446,62V)	107,00% (446,62V)	107,00% (446,62V)	100,00% (417,40V)	135,00% (563,49V)
.029	T VLL>>	Time OFF		200 ms	200 ms	200 ms	50 ms	300000 ms
Only active for:		Connection Modes: 3-wire, 4-wire (LN+LL)						

Undervoltage2 Line to Line					Conformity Range		Possible Range	
ID				Default	Min	Max	Min	Max
.030	VLL<<	Enable function		on				
.031	VLL<< off	UTHR OFF	%Unom /VUnom	29,20% (121,88V)	29,20% (121,88V)	29,20% (121,88V)	0,00% (0,00V)	100,00% (417,40V)
.032	VLL<< on	UTHR ON	%Unom /VUnom	78,00% (325,57V)	78,00% (325,57V)	78,00% (325,57V)	0,00% (0,00V)	100,00% (417,40V)
.033	T VLL<<	Time OFF		2000 ms	2000 ms	2000 ms	50 ms	300000 ms
Only active for:		Connection Modes: 3-wire, 4-wire (LN+LL)						

Overvoltage2 Line to Neutral					Conformity Range		Possible Range	
ID				Default	Min	Max	Min	Max
.034	V>>	Enable function		on	on / off		on / off	
.035	V>> off	UTHR OFF	%Unom /VUnom	114,00% (273,61V)	114,00% (273,61V)	114,00% (273,61V)	100,00% (240,01V)	135,00% (324,01V)
.036	V>> on	UTHR ON	%Unom /VUnom	107,00% (256,81V)	107,00% (256,81V)	107,00% (256,81V)	100,00% (240,01V)	135,00% (324,01V)
.037	T V>>	Time OFF		200 ms	200 ms	200 ms	100 ms	300000 ms
Only active for:		Connection Modes: 2-wire, 4-wire (LN), 4-wire (LN+LL)						

Undervoltage2 Line to Neutral	Conformity Range	Possible Range

ID				Default	Min	Max	Min	Max
.038	V<<	Enable function		on	on / off		on / off	
.039	V<< off	UTHR OFF	%Unom /VUnom	29,20% (70,08V)	29,20% (70,08V)	29,20% (70,08V)	0,00% (0,00V)	100,00% (240,01V)
.040	V<< on	UTHR ON	%Unom /VUnom	78,00% (187,20V)	78,00% (187,20V)	78,00% (187,20V)	0,00% (0,00V)	100,00% (240,01V)
.041	T V<<	Time OFF		2000 ms	2000 ms	2000 ms	50 ms	300000 ms
Only active for:		Connection Modes: 2-wire, 4-wire (LN), 4-wire (LN+LL)						

Zero Voltage Line to Neutral					Conformity Range		Possible Range	
ID				Default	Min	Max	Min	Max
.115	Uzero>	Enable Function		off	on / off		on / off	
.116	Uzero> off	UTHR OFF	%Unom /VUnom	20,00% (48,00V)	20,00% (48,00V)	20,00% (48,00V)	1,00% (2,40V)	100,00% (240,01V)
.117	Uzero> on	UTHR ON	%Unom /VUnom	15,00% (36,00V)	15,00% (36,00V)	15,00% (36,00V)	1,00% (2,40V)	100,00% (240,01V)
.118	T Uzero>	Time OFF		1500 ms	1500 ms	1500 ms	0 ms	300000 ms
Only active for:		Connection Modes: 4-wire (LN+LL)						

10 minutes average overvoltage					Conformity Range		Possible Range	
ID				Default	Min	Max	Min	Max
.042	Uavg	Enable function		on	on / off		on / off	
.043	Uavg off	UTHR OFF	%Unom /VUnom	106,00% (254,41V /442,44V)	106,00% (254,41V /442,44V)	106,00% (254,41V /442,44V)	100,00% (240,01V /417,40V)	135,00% (324,01V /563,49V)
.044	Uavg on	UTHR ON	%Unom /VUnom	104,00% (249,61V /434,10V)	104,00% (249,61V /434,10V)	104,00% (249,61V /434,10V)	100,00% (240,01V /417,40V)	135,00% (324,01V /563,49V)

Overfrequency1	Conformity Range	Possible Range

ID			Default	Min	Max	Min	Max
.055	F> off	f_{THR} OFF	52,000 Hz	52,000 Hz	52,000 Hz	50,000 Hz	55,000 Hz
.056	F> on	f_{THR} ON	51,900 Hz	51,900 Hz	51,900 Hz	50,000 Hz	55,000 Hz
.057	T F>	Time OFF	2000 ms	2000 ms	2000 ms	100 ms	300000 ms

Underfrequency1				Conformity Range		Possible Range	
ID			Default	Min	Max	Min	Max
.059	F< off	f_{THR} OFF	47,000 Hz	47,000 Hz	47,000 Hz	40,000 Hz	50,000 Hz
.060	F< on	f_{THR} ON	47,500 Hz	47,500 Hz	47,500 Hz	40,000 Hz	50,000 Hz
.061	T F<	Time OFF	2000 ms	2000 ms	2000 ms	100 ms	300000 ms

Frequency measuring in general				Conformity Range			
ID			Default	Min	Max		
.113	F wnd	Window length	100 ms	100 ms	100 ms		

Rate of Change of Frequency (RoCoF)				Conformity Range		Possible Range	
ID			Default	Min	Max	Min	Max
.090	RoCoF	En Function	on	on / off		on / off	
.091	RoCoF off	$RoCoF_{THR}$ OFF	3000 mHz/s	3000 mHz/s	3000 mHz/s	10 mHz/s	5000 mHz/s
.092	RoCoF on	$RoCoF_{THR}$ ON	2950 mHz/s	2950 mHz/s	2950 mHz/s	10 mHz/s	4950 mHz/s
.093	RoCoFDelay	Time OFF	850 ms	850 ms	850 ms	100 ms	10000 ms
.111	RoCoF wnd	Window length	225 ms	100 ms	1000 ms	100 ms	1000 ms

Phase Shift (PShift)				Conformity Range		Possible Range	
ID			Default	Min	Max	Min	Max
.094	PShift	Enable Function	on	on / off		on / off	

.095	PShift off	PShift THR OFF	21,0 °	21,0 °	21,0 °	1,0 °	25,0 °
.096	Pshift on	PShift THR ON	19,0 °	19,0 °	19,0 °	1,0 °	24,0 °
.097	PshiftDel	Time OFF	50 ms	50 ms	50 ms	50 ms	10000 ms
.112	PShift wnd	Window length	50 ms	50 ms	500 ms	50 ms	1000 ms

Auxiliary Contact type				Conformity Range		Possible Range	
ID			Default	Min	Max	Min	Max
.099	Contact	Type	n.c. (normally closed)	n.o. (normally opened) n.c. (normally closed)		n.o. (normally opened) n.c. (normally closed) dis. (disabled)	
.100	T Contact	Time OFF	Fixed to 500 ms				
.114	I3 STOP	Type	n.o. (normally opened)	n.o. (normally opened) n.c. (normally closed)		n.o. (normally opened) n.c. (normally closed) dis. (disabled)	

Turn-on delay				Conformity Range		Possible Range	
ID			Default	Min	Max	Min	Max
.102	T on delay	Turn on time	60 s	0 s	60 s	0 s	900 s

Password					
ID			Default	Min	Max
.106	PW1	1st digit of Password	0	0	9
.107	PW2	2nd digit of Password	0	0	9
.108	PW3	3rd digit of Password	0	0	9
.109	PW4	4th digit of Password	0	0	9
Remark:		If all 4 digits of the Password are 0 (default setting) the Password request is skipped			

Errorlogic signalled (shown) on output relay R3. On = it is possible to detect this error Off = it is not possible to show this error on relay R3	
Overvoltage LL (UΔ)	on

Undervoltage LL (UΔ)	on
Overvoltage LN (UY)	on
Undervoltage LN (UY)	on
10-min overvoltage (Ū)	on
Overfrequency (f)	on
Underfrequency (f)	on
RoCoF (Rate of Change of Frequency) (Δf)	on
Phase shift (ΔΦ)	on
Remote shutdown / self-test (R)	off
Contactor feedback contact reports closed, although it should be open (C)	on
Contactor feedback contact reports open, although it should be closed (no error, only info) (c)	on

Device Information		
ID		
.105	SN: xxxxxxxxxx	xxxxxxxxxx = Device Serial Number
	SW: aa.dd.ccb	dd: Software version of Display Software aa: Software version of Measuring Software cc: Index of Configuration set b: Version of Configuration set

10.49 VIC-Ausnet Energy 23 [ID 1155]

Connection Mode			Conformity Range	Possible Range
ID		Default		
.003	Connection	4-wire LL+LN	4-wire LN - 4-wire LL+LN	2-wire LN - 4-wire LL+LN

Nominal Voltage				Conformity Range		Possible Range	
ID			Default	Min	Max	Min	Max
.005	ULN/LL nom	Unom Y Unom Δ	240,01V /417,40V	230,00V /400,00V	240,01V /417,40V	99,99V /173,90V	240,01V /417,40V

Functional Safety			Conformity Range	Possible Range
ID		Default		
.007	Errtol	2ch	2ch, 1ch	2ch, 1ch
Remark:		2ch means: 2 channel with functional safety and 2 auxilliary contacts necessary 1ch means: 1 channel without functional safety and 1 auxilliary contact1 necessary		

Overvoltage1 Line to Line					Conformity Range		Possible Range	
ID				Default	Min	Max	Min	Max
.010	VLL>	Enable function		on	on / off		on / off	
.011	VLL> off	U_{THR} OFF	%Unom /VUnom	108,00% (450,79V)	108,00% (450,79V)	108,00% (450,79V)	100,00% (417,40V)	135,00% (563,49V)
.012	VLL> on	U_{THR} ON	%Unom /VUnom	105,00% (438,27V)	105,00% (438,27V)	105,00% (438,27V)	100,00% (417,40V)	135,00% (563,49V)
.013	T VLL>	Time OFF		2000 ms	2000 ms	2000 ms	50 ms	300000 ms
Only active for:		Connection Modes: 3-wire, 4-wire (LN+LL)						

Undervoltage1 Line to Line		Conformity Range		Possible Range	
ID		Default	Min	Max	Min	Max

.014	VLL<	Enable function		on	on / off		on / off	
.015	VLL< off	UTHR OFF	%Unom /VUnom	75,00% (313,05V)	75,00% (313,05V)	75,00% (313,05V)	0,00% (0,00V)	100,00% (417,40V)
.016	VLL< on	UTHR ON	%Unom /VUnom	78,00% (325,57V)	78,00% (325,57V)	78,00% (325,57V)	0,00% (0,00V)	100,00% (417,40V)
.017	T VLL<	Time OFF		2000 ms	2000 ms	2000 ms	50 ms	300000 ms
Only active for:		Connection Modes: 3-wire, 4-wire (LN+LL)						

Overvoltage1 Line to Neutral					Conformity Range		Possible Range	
ID				Default	Min	Max	Min	Max
.019	V> off	UTHR OFF	%Unom /VUnom	108,00% (259,21V)	108,00% (259,21V)	108,00% (259,21V)	100,00% (240,01V)	135,00% (324,01V)
.020	V> on	UTHR ON	%Unom /VUnom	105,00% (252,01V)	105,00% (252,01V)	105,00% (252,01V)	100,00% (240,01V)	135,00% (324,01V)
.021	T V>	Time OFF		2000 ms	2000 ms	2000 ms	50 ms	300000 ms
Only active for:		Connection Modes: 2-wire, 4-wire (LN), 4-wire (LN+LL)						

Undervoltage1 Line to Neutral					Conformity Range		Possible Range	
ID				Default	Min	Max	Min	Max
.023	V< off	UTHR OFF	%Unom /VUnom	75,00% (180,00V)	75,00% (180,00V)	75,00% (180,00V)	0,00% (0,00V)	100,00% (240,01V)
.024	V< on	UTHR ON	%Unom /VUnom	78,00% (187,20V)	78,00% (187,20V)	78,00% (187,20V)	0,00% (0,00V)	100,00% (240,01V)
.025	T V<	Time OFF		2000 ms	2000 ms	2000 ms	50 ms	300000 ms
Only active for:		Connection Modes: 2-wire, 4-wire (LN), 4-wire (LN+LL))						

Zero Voltage Line to Neutral			Conformity Range		Possible Range	
ID		Default	Min	Max	Min	Max

.115	Uzero>	Enable Function		off	on / off		on / off	
.116	Uzero> off	U_{THR} OFF	%Unom /VUnom	20,00% (48,00V)	20,00% (48,00V)	20,00% (48,00V)	1,00% (2,40V)	100,00% (240,01V)
.117	Uzero> on	U_{THR} ON	%Unom /VUnom	15,00% (36,00V)	15,00% (36,00V)	15,00% (36,00V)	1,00% (2,40V)	100,00% (240,01V)
.118	T Uzero>	Time OFF		1500 ms	1500 ms	1500 ms	0 ms	300000 ms
Only active for:		Connection Modes: 4-wire (LN+LL)						

Overfrequency1				Conformity Range		Possible Range	
ID			Default	Min	Max	Min	Max
.055	F> off	f_{THR} OFF	52,000 Hz	52,000 Hz	52,000 Hz	50,000 Hz	55,000 Hz
.056	F> on	f_{THR} ON	51,900 Hz	51,900 Hz	51,900 Hz	50,000 Hz	55,000 Hz
.057	T F>	Time OFF	2000 ms	2000 ms	2000 ms	100 ms	300000 ms

Underfrequency1				Conformity Range		Possible Range	
ID			Default	Min	Max	Min	Max
.059	F< off	f_{THR} OFF	47,500 Hz	47,500 Hz	47,500 Hz	40,000 Hz	50,000 Hz
.060	F< on	f_{THR} ON	48,000 Hz	48,000 Hz	48,000 Hz	40,000 Hz	50,000 Hz
.061	T F<	Time OFF	2000 ms	2000 ms	2000 ms	100 ms	300000 ms

Frequency measuring in general				Conformity Range			
ID			Default	Min	Max		
.113	F wnd	Window length	100 ms	100 ms	100 ms		

Rate of Change of Frequency (RoCoF)				Conformity Range		Possible Range	
ID			Default	Min	Max	Min	Max
.090	RoCoF	En Function	on	on / off		on / off	
.091	RoCoF off	$RoCoF_{THR}$ OFF	4000 mHz/s	4000 mHz/s	4000 mHz/s	10 mHz/s	5000 mHz/s

.092	RoCoF on	RoCoF$_{\text{THR}}$ ON	3950 mHz/s	3950 mHz/s	3950 mHz/s	10 mHz/s	4950 mHz/s
.093	RoCoFDelay	Time OFF	850 ms	850 ms	850 ms	100 ms	10000 ms
.111	RoCoF wnd	Window length	225 ms	100 ms	1000 ms	100 ms	1000 ms

Phase Shift (PShift)				Conformity Range		Possible Range	
ID			Default	Min	Max	Min	Max
.094	PShift	Enable Function	on	on / off		on / off	
.095	PShift off	PShift$_{\text{THR}}$ OFF	8,0 °	8,0 °	8,0 °	1,0 °	25,0 °
.096	Pshift on	PShift$_{\text{THR}}$ ON	6,0 °	6,0 °	6,0 °	1,0 °	24,0 °
.097	PshiftDel	Time OFF	50 ms	50 ms	50 ms	50 ms	10000 ms
.112	PShift wnd	Window length	50 ms	50 ms	500 ms	50 ms	1000 ms

Auxiliary Contact type				Conformity Range		Possible Range	
ID			Default	Min	Max	Min	Max
.099	Contact	Type	n.c. (normally closed)	n.o. (normally opened) n.c. (normally closed)		n.o. (normally opened) n.c. (normally closed) dis. (disabled)	
.100	T Contact	Time OFF	Fixed to 500 ms				
.114	I3 STOP	Type	n.o. (normally opened)	n.o. (normally opened) n.c. (normally closed)		n.o. (normally opened) n.c. (normally closed) dis. (disabled)	

Turn-on delay				Conformity Range		Possible Range	
ID			Default	Min	Max	Min	Max
.102	T on delay	Turn on time	60 s	0 s	60 s	0 s	900 s

Password					
ID			Default	Min	Max
.106	PW1	1st digit of Password	0	0	9

.107	PW2	2nd digit of Password	0	0	9
.108	PW3	3rd digit of Password	0	0	9
.109	PW4	4th digit of Password	0	0	9
Remark:		If all 4 digits of the Password are 0 (default setting) the Password request is skipped			

Errorlogic signalled (shown) on output relay R3. On = it is possible to detect this error Off = it is not possible to show this error on relay R3	
Overvoltage LL (UΔ)	on
Undervoltage LL (UΔ)	on
Overvoltage LN (UY)	on
Undervoltage LN (UY)	on
10-min overvoltage (Ū)	on
Overfrequency (f)	on
Underfrequency (f)	on
RoCoF (Rate of Change of Frequency) (Δf)	on
Phase shift (ΔΦ)	on
Remote shutdown / self-test (R)	off
Contactor feedback contact reports closed, although it should be open (C)	on
Contactor feedback contact reports open, although it should be closed (no error, only info) (c)	on

Device Information		
ID		
.105	SN: xxxxxxxxxx SW: aa.dd.ccb	xxxxxxxxxx = Device Serial Number dd: Software version of Display Software aa: Software version of Measuring Software cc: Index of Configuration set b: Version of Configuration set

10.50 VIC-Citipower 23 [ID 1160]

Connection Mode			Conformity Range	Possible Range
ID		Default		
.003	Connection	4-wire LL+LN	4-wire LN - 4-wire LL+LN	2-wire LN - 4-wire LL+LN

Nominal Voltage				Conformity Range		Possible Range	
ID			Default	Min	Max	Min	Max
.005	ULN/LL nom	Unom Y Unom Δ	240,01V /417,40V	230,00V /400,00V	240,01V /417,40V	99,99V /173,90V	240,01V /417,40V

Functional Safety			Conformity Range	Possible Range
ID		Default		
.007	Errtol	2ch	2ch, 1ch	2ch, 1ch
Remark:		2ch means: 2 channel with functional safety and 2 auxilliary contacts necessary 1ch means: 1 channel without functional safety and 1 auxilliary contact1 necessary		

Overvoltage1 Line to Line					Conformity Range		Possible Range	
ID				Default	Min	Max	Min	Max
.010	VLL>	Enable function		on	on / off		on / off	
.011	VLL> off	UTHR OFF	%Unom /VUnom	108,00% (450,79V)	108,00% (450,79V)	108,00% (450,79V)	100,00% (417,40V)	135,00% (563,49V)
.012	VLL> on	UTHR ON	%Unom /VUnom	105,00% (438,27V)	105,00% (438,27V)	105,00% (438,27V)	100,00% (417,40V)	135,00% (563,49V)
.013	T VLL>	Time OFF		2000 ms	2000 ms	2000 ms	50 ms	300000 ms
Only active for:		Connection Modes: 3-wire, 4-wire (LN+LL)						

Undervoltage1 Line to Line		Conformity Range		Possible Range	
ID		Default	Min	Max	Min	Max

.014	VLL<	Enable function		on	on / off		on / off	
.015	VLL< off	UTHR OFF	%Unom /VUnom	75,00% (313,05V)	75,00% (313,05V)	75,00% (313,05V)	0,00% (0,00V)	100,00% (417,40V)
.016	VLL< on	UTHR ON	%Unom /VUnom	78,00% (325,57V)	78,00% (325,57V)	78,00% (325,57V)	0,00% (0,00V)	100,00% (417,40V)
.017	T VLL<	Time OFF		2000 ms	2000 ms	2000 ms	50 ms	300000 ms
Only active for:		Connection Modes: 3-wire, 4-wire (LN+LL)						

Overvoltage1 Line to Neutral					Conformity Range		Possible Range	
ID				Default	Min	Max	Min	Max
.019	V> off	UTHR OFF	%Unom /VUnom	108,00% (259,21V)	108,00% (259,21V)	108,00% (259,21V)	100,00% (240,01V)	135,00% (324,01V)
.020	V> on	UTHR ON	%Unom /VUnom	105,00% (252,01V)	110,00% (264,01V)	110,00% (264,01V)	100,00% (240,01V)	135,00% (324,01V)
.021	T V>	Time OFF		2000 ms	2000 ms	2000 ms	50 ms	300000 ms
Only active for:		Connection Modes: 2-wire, 4-wire (LN), 4-wire (LN+LL)						

Undervoltage1 Line to Neutral					Conformity Range		Possible Range	
ID				Default	Min	Max	Min	Max
.023	V< off	UTHR OFF	%Unom /VUnom	75,00% (180,00V)	75,00% (180,00V)	75,00% (180,00V)	0,00% (0,00V)	100,00% (240,01V)
.024	V< on	UTHR ON	%Unom /VUnom	78,00% (187,20V)	78,00% (187,20V)	78,00% (187,20V)	0,00% (0,00V)	100,00% (240,01V)
.025	T V<	Time OFF		2000 ms	2000 ms	2000 ms	50 ms	300000 ms
Only active for:		Connection Modes: 2-wire, 4-wire (LN), 4-wire (LN+LL))						

Zero Voltage Line to Neutral			Conformity Range		Possible Range	
ID		Default	Min	Max	Min	Max

.115	Uzero>	Enable Function		off	on / off		on / off	
.116	Uzero> off	UTHR OFF	%Unom /VUnom	20,00% (48,00V)	20,00% (48,00V)	20,00% (48,00V)	1,00% (2,40V)	100,00% (240,01V)
.117	Uzero> on	UTHR ON	%Unom /VUnom	15,00% (36,00V)	15,00% (36,00V)	15,00% (36,00V)	1,00% (2,40V)	100,00% (240,01V)
.118	T Uzero>	Time OFF		1500 ms	1500 ms	1500 ms	0 ms	300000 ms
Only active for:		Connection Modes: 4-wire (LN+LL)						

10 minutes average overvoltage					Conformity Range		Possible Range	
ID				Default	Min	Max	Min	Max
.042	Uavg	Enable function		on	on / off		on / off	
.043	Uavg off	UTHR OFF	%Unom /VUnom	106,00% (254,41V /442,44V)	106,00% (254,41V /442,44V)	106,00% (254,41V /442,44V)	100,00% (240,01V /417,40V)	135,00% (324,01V /563,49V)
.044	Uavg on	UTHR ON	%Unom /VUnom	104,00% (249,61V /434,10V)	104,00% (249,61V /434,10V)	104,00% (249,61V /434,10V)	100,00% (240,01V /417,40V)	135,00% (324,01V /563,49V)

Overfrequency1				Conformity Range		Possible Range	
ID			Default	Min	Max	Min	Max
.055	F> off	fTHR OFF	52,000 Hz	52,000 Hz	52,000 Hz	50,000 Hz	55,000 Hz
.056	F> on	fTHR ON	51,900 Hz	51,900 Hz	51,900 Hz	50,000 Hz	55,000 Hz
.057	T F>	Time OFF	2000 ms	2000 ms	2000 ms	100 ms	300000 ms

Underfrequency1				Conformity Range		Possible Range	
ID			Default	Min	Max	Min	Max
.059	F< off	fTHR OFF	47,000 Hz	47,000 Hz	47,000 Hz	40,000 Hz	50,000 Hz
.060	F< on	fTHR ON	47,500 Hz	47,500 Hz	47,500 Hz	40,000 Hz	50,000 Hz

.061	T F<	Time OFF	2000 ms	2000 ms	2000 ms	100 ms	300000 ms

Frequency measuring in general				Conformity Range			
ID			Default	Min	Max		
.113	F wnd	Window length	100 ms	100 ms	100 ms		

Rate of Change of Frequency (RoCoF)				Conformity Range		Possible Range	
ID			Default	Min	Max	Min	Max
.090	RoCoF	En Function	on	on / off		on / off	
.091	RoCoF off	RoCoFTHR OFF	1000 mHz/s	1000 mHz/s	1000 mHz/s	10 mHz/s	5000 mHz/s
.092	RoCoF on	RoCoFTHR ON	950 mHz/s	950 mHz/s	950 mHz/s	10 mHz/s	4950 mHz/s
.093	RoCoFDelay	Time OFF	850 ms	850 ms	850 ms	100 ms	10000 ms
.111	RoCoF wnd	Window length	225 ms	100 ms	1000 ms	100 ms	1000 ms

Phase Shift (PShift)				Conformity Range		Possible Range	
ID			Default	Min	Max	Min	Max
.094	PShift	Enable Function	on	on / off		on / off	
.095	PShift off	PShift THR OFF	8,0 °	8,0 °	8,0 °	1,0 °	25,0 °
.096	Pshift on	PShift THR ON	6,0 °	6,0 °	6,0 °	1,0 °	24,0 °
.097	PshiftDel	Time OFF	50 ms	50 ms	50 ms	50 ms	10000 ms
.112	PShift wnd	Window length	50 ms	50 ms	500 ms	50 ms	1000 ms

Auxiliary Contact type				Conformity Range		Possible Range	
ID			Default	Min	Max	Min	Max
.099	Contact	Type	n.c. (normally closed)	n.o. (normally opened) n.c. (normally closed)		n.o. (normally opened) n.c. (normally closed) dis. (disabled)	
.100	T Contact	Time OFF	Fixed to 500 ms				

.114	I3 STOP	Type	n.o. (normally opened)	n.o. (normally opened) n.c. (normally closed)	n.o. (normally opened) n.c. (normally closed) dis. (disabled)

Turn-on delay				Conformity Range		Possible Range	
ID			Default	Min	Max	Min	Max
.102	T on delay	Turn on time	60 s	0 s	60 s	0 s	900 s

Password					
ID			Default	Min	Max
.106	PW1	1st digit of Password	0	0	9
.107	PW2	2nd digit of Password	0	0	9
.108	PW3	3rd digit of Password	0	0	9
.109	PW4	4th digit of Password	0	0	9
Remark:		If all 4 digits of the Password are 0 (default setting) the Password request is skipped			

Errorlogic signalled (shown) on output relay R3. On = it is possible to detect this error Off = it is not possible to show this error on relay R3	
Overvoltage LL (UΔ)	on
Undervoltage LL (UΔ)	on
Overvoltage LN (UY)	on
Undervoltage LN (UY)	on
10-min overvoltage (Ū)	on
Overfrequency (f)	on
Underfrequency (f)	on
RoCoF (Rate of Change of Frequency) (Δf)	on
Phase shift (ΔΦ)	on
Remote shutdown / self-test (R)	off
Contactor feedback contact reports closed, although it should be open (C)	on
Contactor feedback contact reports open, although it should be closed (no error, only info) (c)	on

Device Information		
ID		
.105	SN: xxxxxxxxxx	xxxxxxxxxx = Device Serial Number
	SW: aa.dd.ccb	dd: Software version of Display Software aa: Software version of Measuring Software cc: Index of Configuration set b: Version of Configuration set

10.51 VIC-Jemana 23 [ID 1165]

Connection Mode			Conformity Range	Possible Range
ID		Default		
.003	Connection	4-wire LL+LN	4-wire LN - 4-wire LL+LN	2-wire LN - 4-wire LL+LN

Nominal Voltage				Conformity Range		Possible Range	
ID			Default	Min	Max	Min	Max
.005	ULN/LL nom	Unom Y Unom Δ	240,01V /417,40V	230,00V /400,00V	240,01V /417,40V	99,99V /173,90V	240,01V /417,40V

Functional Safety			Conformity Range	Possible Range
ID		Default		
.007	Errtol	2ch	2ch, 1ch	2ch, 1ch
Remark:		2ch means: 2 channel with functional safety and 2 auxilliary contacts necessary 1ch means: 1 channel without functional safety and 1 auxilliary contact1 necessary		

Overvoltage1 Line to Line					Conformity Range		Possible Range	
ID				Default	Min	Max	Min	Max
.010	VLL>	Enable function		on	on / off		on / off	
.011	VLL> off	UTHR OFF	%Unom /VUnom	108,00% (450,79V)	108,00% (450,79V)	108,00% (450,79V)	100,00% (417,40V)	135,00% (563,49V)
.012	VLL> on	UTHR ON	%Unom /VUnom	105,00% (438,27V)	105,00% (438,27V)	105,00% (438,27V)	100,00% (417,40V)	135,00% (563,49V)
.013	T VLL>	Time OFF		2000 ms	2000 ms	2000 ms	50 ms	300000 ms
Only active for:		Connection Modes: 3-wire, 4-wire (LN+LL)						

Undervoltage1 Line to Line			Conformity Range		Possible Range	
ID		Default	Min	Max	Min	Max

.014	VLL<	Enable function		on	on / off		on / off	
.015	VLL< off	U_{THR} OFF	%Unom /VUnom	75,00% (313,05V)	75,00% (313,05V)	75,00% (313,05V)	0,00% (0,00V)	100,00% (417,40V)
.016	VLL< on	U_{THR} ON	%Unom /VUnom	78,00% (325,57V)	78,00% (325,57V)	78,00% (325,57V)	0,00% (0,00V)	100,00% (417,40V)
.017	T VLL<	Time OFF		2000 ms	2000 ms	2000 ms	50 ms	300000 ms
Only active for:		Connection Modes: 3-wire, 4-wire (LN+LL)						

Overvoltage1 Line to Neutral					Conformity Range		Possible Range	
ID				Default	Min	Max	Min	Max
.019	V> off	U_{THR} OFF	%Unom /VUnom	108,00% (259,21V)	108,00% (259,21V)	108,00% (259,21V)	100,00% (240,01V)	135,00% (324,01V)
.020	V> on	U_{THR} ON	%Unom /VUnom	105,00% (252,01V)	110,00% (264,01V)	110,00% (264,01V)	100,00% (240,01V)	135,00% (324,01V)
.021	T V>	Time OFF		2000 ms	2000 ms	2000 ms	50 ms	300000 ms
Only active for:		Connection Modes: 2-wire, 4-wire (LN), 4-wire (LN+LL)						

Undervoltage1 Line to Neutral					Conformity Range		Possible Range	
ID				Default	Min	Max	Min	Max
.023	V< off	U_{THR} OFF	%Unom /VUnom	75,00% (180,00V)	75,00% (180,00V)	75,00% (180,00V)	0,00% (0,00V)	100,00% (240,01V)
.024	V< on	U_{THR} ON	%Unom /VUnom	78,00% (187,20V)	78,00% (187,20V)	78,00% (187,20V)	0,00% (0,00V)	100,00% (240,01V)
.025	T V<	Time OFF		2000 ms	2000 ms	2000 ms	50 ms	300000 ms
Only active for:		Connection Modes: 2-wire, 4-wire (LN), 4-wire (LN+LL))						

Zero Voltage Line to Neutral					Conformity Range		Possible Range	
ID				Default	Min	Max	Min	Max

.115	Uzero>	Enable Function		off	on / off		on / off	
.116	Uzero> off	U_{THR} OFF	%Unom /VUnom	20,00% (48,00V)	20,00% (48,00V)	20,00% (48,00V)	1,00% (2,40V)	100,00% (240,01V)
.117	Uzero> on	U_{THR} ON	%Unom /VUnom	15,00% (36,00V)	15,00% (36,00V)	15,00% (36,00V)	1,00% (2,40V)	100,00% (240,01V)
.118	T Uzero>	Time OFF		1500 ms	1500 ms	1500 ms	0 ms	300000 ms
Only active for:		Connection Modes: 4-wire (LN+LL)						

10 minutes average overvoltage					Conformity Range		Possible Range	
ID				Default	Min	Max	Min	Max
.042	Uavg	Enable function		on	on / off		on / off	
.043	Uavg off	U_{THR} OFF	%Unom /VUnom	106,00% (254,41V /442,44V)	106,00% (254,41V /442,44V)	106,00% (254,41V /442,44V)	100,00% (240,01V /417,40V)	135,00% (324,01V /563,49V)
.044	Uavg on	U_{THR} ON	%Unom /VUnom	104,00% (249,61V /434,10V)	104,00% (249,61V /434,10V)	104,00% (249,61V /434,10V)	100,00% (240,01V /417,40V)	135,00% (324,01V /563,49V)

Overfrequency1				Conformity Range		Possible Range	
ID			Default	Min	Max	Min	Max
.055	F> off	f_{THR} OFF	52,000 Hz	52,000 Hz	52,000 Hz	50,000 Hz	55,000 Hz
.056	F> on	f_{THR} ON	51,900 Hz	51,900 Hz	51,900 Hz	50,000 Hz	55,000 Hz
.057	T F>	Time OFF	2000 ms	2000 ms	2000 ms	100 ms	300000 ms

Underfrequency1				Conformity Range		Possible Range	
ID			Default	Min	Max	Min	Max
.059	F< off	f_{THR} OFF	47,000 Hz	47,000 Hz	47,000 Hz	40,000 Hz	50,000 Hz
.060	F< on	f_{THR} ON	47,500 Hz	47,500 Hz	47,500 Hz	40,000 Hz	50,000 Hz

.061	T F<	Time OFF	2000 ms	2000 ms	2000 ms	100 ms	300000 ms

Frequency measuring in general				Conformity Range			
ID			Default	Min	Max		
.113	F wnd	Window length	100 ms	100 ms	100 ms		

Rate of Change of Frequency (RoCoF)				Conformity Range		Possible Range	
ID			Default	Min	Max	Min	Max
.090	RoCoF	En Function	on	on / off		on / off	
.091	RoCoF off	RoCoF$_{THR}$ OFF	1000 mHz/s	1000 mHz/s	1000 mHz/s	10 mHz/s	5000 mHz/s
.092	RoCoF on	RoCoF$_{THR}$ ON	950 mHz/s	950 mHz/s	950 mHz/s	10 mHz/s	4950 mHz/s
.093	RoCoFDelay	Time OFF	1850 ms	850 ms	850 ms	100 ms	10000 ms
.111	RoCoF wnd	Window length	225 ms	100 ms	1000 ms	100 ms	1000 ms

Phase Shift (PShift)				Conformity Range		Possible Range	
ID			Default	Min	Max	Min	Max
.094	PShift	Enable Function	on	on / off		on / off	
.095	PShift off	PShift $_{THR}$ OFF	8,0 °	8,0 °	8,0 °	1,0 °	25,0 °
.096	Pshift on	PShift $_{THR}$ ON	6,0 °	6,0 °	6,0 °	1,0 °	24,0 °
.097	PshiftDel	Time OFF	50 ms	50 ms	50 ms	50 ms	10000 ms
.112	PShift wnd	Window length	50 ms	50 ms	500 ms	50 ms	1000 ms

Auxiliary Contact type				Conformity Range		Possible Range	
ID			Default	Min	Max	Min	Max
.099	Contact	Type	n.c. (normally closed)	n.o. (normally opened) n.c. (normally closed)		n.o. (normally opened) n.c. (normally closed) dis. (disabled)	
.100	T Contact	Time OFF	Fixed to 500 ms				

.114	I3 STOP	Type	n.o. (normally opened)	n.o. (normally opened) n.c. (normally closed)	n.o. (normally opened) n.c. (normally closed) dis. (disabled)

Turn-on delay				Conformity Range		Possible Range	
ID			Default	Min	Max	Min	Max
.102	T on delay	Turn on time	60 s	0 s	60 s	0 s	900 s

Password					
ID			Default	Min	Max
.106	PW1	1st digit of Password	0	0	9
.107	PW2	2nd digit of Password	0	0	9
.108	PW3	3rd digit of Password	0	0	9
.109	PW4	4th digit of Password	0	0	9
Remark:		If all 4 digits of the Password are 0 (default setting) the Password request is skipped			

Errorlogic signalled (shown) on output relay R3. On = it is possible to detect this error Off = it is not possible to show this error on relay R3	
Overvoltage LL (UΔ)	on
Undervoltage LL (UΔ)	on
Overvoltage LN (UY)	on
Undervoltage LN (UY)	on
10-min overvoltage ($\bar{U}$)	on
Overfrequency (f)	on
Underfrequency (f)	on
RoCoF (Rate of Change of Frequency) (Δf)	on
Phase shift (ΔΦ)	on
Remote shutdown / self-test (R)	off
Contactor feedback contact reports closed, although it should be open (C)	on
Contactor feedback contact reports open, although it should be closed (no error, only info) (c)	on

Device Information		
ID		
.105	SN: xxxxxxxxxx	xxxxxxxxxx = Device Serial Number
	SW: aa.dd.ccb	dd: Software version of Display Software aa: Software version of Measuring Software cc: Index of Configuration set b: Version of Configuration set

10.52 VIC-Powercor 23 [ID 1170]

Connection Mode			Conformity Range	Possible Range
ID		Default		
.003	Connection	4-wire LL+LN	4-wire LN - 4-wire LL+LN	2-wire LN - 4-wire LL+LN

Nominal Voltage				Conformity Range		Possible Range	
ID			Default	Min	Max	Min	Max
.005	ULN/LL nom	Unom Y Unom Δ	240,01V /417,40V	230,00V /400,00V	240,01V /417,40V	99,99V /173,90V	240,01V /417,40V

Functional Safety			Conformity Range	Possible Range
ID		Default		
.007	Errtol	2ch	2ch, 1ch	2ch, 1ch
Remark:		2ch means: 2 channel with functional safety and 2 auxilliary contacts necessary 1ch means: 1 channel without functional safety and 1 auxilliary contact1 necessary		

Overvoltage1 Line to Line					Conformity Range		Possible Range	
ID				Default	Min	Max	Min	Max
.010	VLL>	Enable function		on	on / off		on / off	
.011	VLL> off	UTHR OFF	%Unom /VUnom	108,00% (450,79V)	108,00% (450,79V)	108,00% (450,79V)	100,00% (417,40V)	135,00% (563,49V)
.012	VLL> on	UTHR ON	%Unom /VUnom	105,00% (438,27V)	105,00% (438,27V)	105,00% (438,27V)	100,00% (417,40V)	135,00% (563,49V)
.013	T VLL>	Time OFF		2000 ms	2000 ms	2000 ms	50 ms	300000 ms
Only active for:		Connection Modes: 3-wire, 4-wire (LN+LL)						

Undervoltage1 Line to Line			Conformity Range		Possible Range	
ID		Default	Min	Max	Min	Max

.014	VLL<	Enable function		on	on / off		on / off	
.015	VLL< off	UTHR OFF	%Unom /VUnom	75,00% (313,05V)	75,00% (313,05V)	75,00% (313,05V)	0,00% (0,00V)	100,00% (417,40V)
.016	VLL< on	UTHR ON	%Unom /VUnom	78,00% (325,57V)	78,00% (325,57V)	78,00% (325,57V)	0,00% (0,00V)	100,00% (417,40V)
.017	T VLL<	Time OFF		2000 ms	2000 ms	2000 ms	50 ms	300000 ms
Only active for:		Connection Modes: 3-wire, 4-wire (LN+LL)						

Overvoltage1 Line to Neutral					Conformity Range		Possible Range	
ID				Default	Min	Max	Min	Max
.019	V> off	UTHR OFF	%Unom /VUnom	108,00% (259,21V)	108,00% (259,21V)	108,00% (259,21V)	100,00% (240,01V)	135,00% (324,01V)
.020	V> on	UTHR ON	%Unom /VUnom	105,00% (252,01V)	110,00% (264,01V)	110,00% (264,01V)	100,00% (240,01V)	135,00% (324,01V)
.021	T V>	Time OFF		2000 ms	2000 ms	2000 ms	50 ms	300000 ms
Only active for:		Connection Modes: 2-wire, 4-wire (LN), 4-wire (LN+LL)						

Undervoltage1 Line to Neutral					Conformity Range		Possible Range	
ID				Default	Min	Max	Min	Max
.023	V< off	UTHR OFF	%Unom /VUnom	75,00% (180,00V)	75,00% (180,00V)	75,00% (180,00V)	0,00% (0,00V)	100,00% (240,01V)
.024	V< on	UTHR ON	%Unom /VUnom	78,00% (187,20V)	78,00% (187,20V)	78,00% (187,20V)	0,00% (0,00V)	100,00% (240,01V)
.025	T V<	Time OFF		2000 ms	2000 ms	2000 ms	50 ms	300000 ms
Only active for:		Connection Modes: 2-wire, 4-wire (LN), 4-wire (LN+LL))						

Zero Voltage Line to Neutral			Conformity Range		Possible Range	
ID		Default	Min	Max	Min	Max

.115	Uzero>	Enable Function		off	on / off		on / off	
.116	Uzero> off	UTHR OFF	%Unom /VUnom	20,00% (48,00V)	20,00% (48,00V)	20,00% (48,00V)	1,00% (2,40V)	100,00% (240,01V)
.117	Uzero> on	UTHR ON	%Unom /VUnom	15,00% (36,00V)	15,00% (36,00V)	15,00% (36,00V)	1,00% (2,40V)	100,00% (240,01V)
.118	T Uzero>	Time OFF		1500 ms	1500 ms	1500 ms	0 ms	300000 ms
Only active for:		Connection Modes: 4-wire (LN+LL)						

10 minutes average overvoltage					Conformity Range		Possible Range	
ID				Default	Min	Max	Min	Max
.042	Uavg	Enable function		on	on / off		on / off	
.043	Uavg off	UTHR OFF	%Unom /VUnom	106,00% (254,41V /442,44V)	106,00% (254,41V /442,44V)	106,00% (254,41V /442,44V)	100,00% (240,01V /417,40V)	135,00% (324,01V /563,49V)
.044	Uavg on	UTHR ON	%Unom /VUnom	104,00% (249,61V /434,10V)	104,00% (249,61V /434,10V)	104,00% (249,61V /434,10V)	100,00% (240,01V /417,40V)	135,00% (324,01V /563,49V)

Overfrequency1				Conformity Range		Possible Range	
ID			Default	Min	Max	Min	Max
.055	F> off	fTHR OFF	52,000 Hz	52,000 Hz	52,000 Hz	50,000 Hz	55,000 Hz
.056	F> on	fTHR ON	51,900 Hz	51,900 Hz	51,900 Hz	50,000 Hz	55,000 Hz
.057	T F>	Time OFF	2000 ms	2000 ms	2000 ms	100 ms	300000 ms

Underfrequency1				Conformity Range		Possible Range	
ID			Default	Min	Max	Min	Max
.059	F< off	fTHR OFF	47,000 Hz	47,000 Hz	47,000 Hz	40,000 Hz	50,000 Hz
.060	F< on	fTHR ON	47,500 Hz	47,500 Hz	47,500 Hz	40,000 Hz	50,000 Hz

.061	T F<	Time OFF	2000 ms	2000 ms	2000 ms	100 ms	300000 ms

Frequency measuring in general				Conformity Range			
ID			Default	Min	Max		
.113	F wnd	Window length	100 ms	100 ms	100 ms		

Rate of Change of Frequency (RoCoF)				Conformity Range		Possible Range	
ID			Default	Min	Max	Min	Max
.090	RoCoF	En Function	on	on / off		on / off	
.091	RoCoF off	RoCoFTHR OFF	1000 mHz/s	1000 mHz/s	1000 mHz/s	10 mHz/s	5000 mHz/s
.092	RoCoF on	RoCoFTHR ON	950 mHz/s	950 mHz/s	950 mHz/s	10 mHz/s	4950 mHz/s
.093	RoCoFDelay	Time OFF	850 ms	850 ms	850 ms	100 ms	10000 ms
.111	RoCoF wnd	Window length	225 ms	100 ms	1000 ms	100 ms	1000 ms

Phase Shift (PShift)				Conformity Range		Possible Range	
ID			Default	Min	Max	Min	Max
.094	PShift	Enable Function	on	on / off		on / off	
.095	PShift off	PShift THR OFF	8,0 °	8,0 °	8,0 °	1,0 °	25,0 °
.096	Pshift on	PShift THR ON	6,0 °	6,0 °	6,0 °	1,0 °	24,0 °
.097	PshiftDel	Time OFF	50 ms	50 ms	50 ms	50 ms	10000 ms
.112	PShift wnd	Window length	50 ms	50 ms	500 ms	50 ms	1000 ms

Auxiliary Contact type				Conformity Range		Possible Range	
ID			Default	Min	Max	Min	Max
.099	Contact	Type	n.c. (normally closed)	n.o. (normally opened) n.c. (normally closed)		n.o. (normally opened) n.c. (normally closed) dis. (disabled)	
.100	T Contact	Time OFF	Fixed to 500 ms				

.114	I3 STOP	Type	n.o. (normally opened)	n.o. (normally opened) n.c. (normally closed)	n.o. (normally opened) n.c. (normally closed) dis. (disabled)

Turn-on delay				Conformity Range		Possible Range	
ID			Default	Min	Max	Min	Max
.102	T on delay	Turn on time	60 s	0 s	60 s	0 s	900 s

Password					
ID			Default	Min	Max
.106	PW1	1st digit of Password	0	0	9
.107	PW2	2nd digit of Password	0	0	9
.108	PW3	3rd digit of Password	0	0	9
.109	PW4	4th digit of Password	0	0	9
Remark:		If all 4 digits of the Password are 0 (default setting) the Password request is skipped			

Errorlogic signalled (shown) on output relay R3. On = it is possible to detect this error Off = it is not possible to show this error on relay R3	
Overvoltage LL (UΔ)	on
Undervoltage LL (UΔ)	on
Overvoltage LN (UY)	on
Undervoltage LN (UY)	on
10-min overvoltage (Ū)	on
Overfrequency (f)	on
Underfrequency (f)	on
RoCoF (Rate of Change of Frequency) (Δf)	on
Phase shift (ΔΦ)	on
Remote shutdown / self-test (R)	off
Contactor feedback contact reports closed, although it should be open (C)	on
Contactor feedback contact reports open, although it should be closed (no error, only info) (c)	on

Device Information		
ID		
.105	SN: xxxxxxxxxx	xxxxxxxxxx = Device Serial Number
	SW: aa.dd.ccb	dd: Software version of Display Software aa: Software version of Measuring Software cc: Index of Configuration set b: Version of Configuration set

10.53 VIC-Western Power 23 [ID 1175]

Connection Mode			Conformity Range	Possible Range
ID		Default		
.003	Connection	4-wire LL+LN	4-wire LN - 4-wire LL+LN	2-wire LN - 4-wire LL+LN

Nominal Voltage				Conformity Range		Possible Range	
ID			Default	Min	Max	Min	Max
.005	ULN/LL nom	Unom Y Unom Δ	240,01V /417,40V	230,00V /400,00V	240,01V /417,40V	99,99V /173,90V	240,01V /417,40V

Functional Safety			Conformity Range	Possible Range
ID		Default		
.007	Errtol	2ch	2ch, 1ch	2ch, 1ch
Remark:		2ch means: 2 channel with functional safety and 2 auxilliary contacts necessary 1ch means: 1 channel without functional safety and 1 auxilliary contact1 necessary		

Overvoltage1 Line to Line					Conformity Range		Possible Range	
ID				Default	Min	Max	Min	Max
.010	VLL>	Enable function		on	on / off		on / off	
.011	VLL> off	UTHR OFF	%Unom /VUnom	106,00% (442,44V)	106,00% (442,44V)	106,00% (442,44V)	100,00% (417,40V)	135,00% (563,49V)
.012	VLL> off	UTHR ON	%Unom /VUnom	103,00% (429,92V)	103,00% (429,92V)	103,00% (429,92V)	100,00% (417,40V)	135,00% (563,49V)
.013	T VLL>	Time OFF		10000 ms	10000 ms	10000 ms	50 ms	300000 ms
Only active for:		Connection Modes: 3-wire, 4-wire (LN+LL)						

Undervoltage1 Line to Line			Conformity Range		Possible Range	
ID			Default	Min	Max	Min	Max
.014	VLL<	Enable function	on				

.015	VLL< off	UTHR OFF	%Unom /VUnom	80,00% (333,92V)	80,00% (333,92V)	80,00% (333,92V)	0,00% (0,00V)	100,00% (417,40V)
.016	VLL< on	UTHR ON	%Unom /VUnom	83,00% (346,44V)	83,00% (346,44V)	83,00% (346,44V)	0,00% (0,00V)	100,00% (417,40V)
.017	T VLL<	Time OFF		10000 ms	10000 ms	10000 ms	50 ms	300000 ms
Only active for:		Connection Modes: 3-wire, 4-wire (LN+LL)						

Overvoltage1 Line to Neutral					Conformity Range		Possible Range	
ID				Default	Min	Max	Min	Max
.019	V> off	UTHR OFF	%Unom /VUnom	106,00% (254,41V)	106,00% (254,41V)	106,00% (254,41V)	100,00% (240,01V)	135,00% (324,01V)
.020	V> on	UTHR ON	%Unom /VUnom	103,00% (247,21V)	103,00% (247,21V)	103,00% (247,21V)	100,00% (240,01V)	135,00% (324,01V)
.021	T V>	Time OFF		10000 ms	10000 ms	10000 ms	50 ms	300000 ms
Only active for:		Connection Modes: 2-wire, 4-wire (LN), 4-wire (LN+LL)						

Undervoltage1 Line to Neutral					Conformity Range		Possible Range	
ID				Default	Min	Max	Min	Max
.023	V< off	UTHR OFF	%Unom /VUnom	80,00% (192,00V)	80,00% (192,00V)	80,00% (192,00V)	0,00% (0,00V)	100,00% (240,01V)
.024	V< on	UTHR ON	%Unom /VUnom	83,00% (199,20V)	83,00% (199,20V)	83,00% (199,20V)	0,00% (0,00V)	100,00% (240,01V)
.025	T V<	Time OFF		10000 ms	10000 ms	10000 ms	50 ms	300000 ms
Only active for:		Connection Modes: 2-wire, 4-wire (LN), 4-wire (LN+LL))						

Overvoltage2 Line to Line					Conformity Range		Possible Range	
ID				Default	Min	Max	Min	Max
.026	VLL>>	Enable function		on				
.027	VLL>> off	UTHR OFF	%Unom /VUnom	110,00% (459,14V)	110,00% (459,14V)	110,00% (459,14V)	100,00% (417,40V)	135,00% (563,49V)

.028	VLL>> on	UTHR ON	%Unom /VUnom	103,00% (429,92V)	103,00% (429,92V)	103,00% (429,92V)	100,00% (417,40V)	135,00% (563,49V)
.029	T VLL>>	Time OFF		500 ms	500 ms	500 ms	50 ms	300000 ms
Only active for:		Connection Modes: 3-wire, 4-wire (LN+LL)						

Undervoltage2 Line to Line					Conformity Range		Possible Range	
ID				Default	Min	Max	Min	Max
.030	VLL<<	Enable function		on				
.031	VLL<< off	UTHR OFF	%Unom /VUnom	50,00% (208,70V)	50,00% (208,70V)	50,00% (208,70V)	0,00% (0,00V)	100,00% (417,40V)
.032	VLL<< on	UTHR ON	%Unom /VUnom	83,00% (346,44V)	83,00% (346,44V)	83,00% (346,44V)	0,00% (0,00V)	100,00% (417,40V)
.033	T VLL<<	Time OFF		500 ms	500 ms	500 ms	50 ms	300000 ms
Only active for:		Connection Modes: 3-wire, 4-wire (LN+LL)						

Overvoltage2 Line to Neutral					Conformity Range		Possible Range	
ID				Default	Min	Max	Min	Max
.034	V>>	Enable function		on	on / off		on / off	
.035	V>> off	UTHR OFF	%Unom /VUnom	110,00% (264,01V)	110,00% (264,01V)	110,00% (264,01V)	100,00% (240,01V)	135,00% (324,01V)
.036	V>> on	UTHR ON	%Unom /VUnom	103,00% (247,21V)	103,00% (247,21V)	103,00% (247,21V)	100,00% (240,01V)	135,00% (324,01V)
.037	T V>>	Time OFF		500 ms	500 ms	500 ms	100 ms	300000 ms
Only active for:		Connection Modes: 2-wire, 4-wire (LN), 4-wire (LN+LL)						

Undervoltage2 Line to Neutral					Conformity Range		Possible Range	
ID				Default	Min	Max	Min	Max
.038	V<<	Enable function		on	on / off		on / off	

.039	V<< off	UTHR OFF	%Unom /VUnom	50,00% (120,00V)	50,00% (120,00V)	50,00% (120,00V)	0,00% (0,00V)	100,00% (240,01V)
.040	V<< on	UTHR ON	%Unom /VUnom	83,00% (199,20V)	83,00% (199,20V)	83,00% (199,20V)	0,00% (0,00V)	100,00% (240,01V)
.041	T V<<	Time OFF		500 ms	500 ms	500 ms	50 ms	300000 ms
Only active for:		Connection Modes: 2-wire, 4-wire (LN), 4-wire (LN+LL)						

Zero Voltage Line to Neutral					Conformity Range		Possible Range	
ID				Default	Min	Max	Min	Max
.115	Uzero>	Enable Function		off	on / off		on / off	
.116	Uzero> off	UTHR OFF	%Unom /VUnom	20,00% (48,00V)	20,00% (48,00V)	20,00% (48,00V)	1,00% (2,40V)	100,00% (240,01V)
.117	Uzero> on	UTHR ON	%Unom /VUnom	15,00% (36,00V)	15,00% (36,00V)	15,00% (36,00V)	1,00% (2,40V)	100,00% (240,01V)
.118	T Uzero>	Time OFF		1500 ms	1500 ms	1500 ms	0 ms	300000 ms
Only active for:		Connection Modes: 4-wire (LN+LL)						

Overfrequency1				Conformity Range		Possible Range	
ID			Default	Min	Max	Min	Max
.055	F> off	fTHR OFF	51,500 Hz	51,500 Hz	51,500 Hz	50,000 Hz	55,000 Hz
.056	F> on	fTHR ON	51,400 Hz	51,400 Hz	51,400 Hz	50,000 Hz	55,000 Hz
.057	T F>	Time OFF	2000 ms	0 ms	2000 ms	0 ms	300000 ms

Underfrequency1				Conformity Range		Possible Range	
ID			Default	Min	Max	Min	Max
.059	F< off	fTHR OFF	47,000 Hz	47,000 Hz	47,000 Hz	40,000 Hz	50,000 Hz
.060	F< on	fTHR ON	47,500 Hz	47,500 Hz	47,500 Hz	40,000 Hz	50,000 Hz
.061	T F<	Time OFF	10000 ms	10000 ms	10000 ms	100 ms	300000 ms

Frequency measuring in general				Conformity Range			
ID			Default	Min	Max		
.113	F wnd	Window length	100 ms	100 ms	100 ms		

Rate of Change of Frequency (RoCoF)				Conformity Range		Possible Range	
ID			Default	Min	Max	Min	Max
.090	RoCoF	En Function	on	on / off		on / off	
.091	RoCoF off	RoCoF$_{THR}$ OFF	4000 mHz/s	4000 mHz/s	4000 mHz/s	10 mHz/s	5000 mHz/s
.092	RoCoF on	RoCoF$_{THR}$ ON	3950 mHz/s	3950 mHz/s	3950 mHz/s	10 mHz/s	4950 mHz/s
.093	RoCoFDelay	Time OFF	0 ms	0 ms	0 ms	0 ms	10000 ms
.111	RoCoF wnd	Window length	100 ms	100 ms	1000 ms	100 ms	1000 ms

Phase Shift (PShift)				Conformity Range		Possible Range	
ID			Default	Min	Max	Min	Max
.094	PShift	Enable Function	on	on / off		on / off	
.095	PShift off	PShift $_{THR}$ OFF	12,0 °	12,0 °	12,0 °	1,0 °	25,0 °
.096	Pshift on	PShift $_{THR}$ ON	10,0 °	10,0 °	10,0 °	1,0 °	24,0 °
.097	PshiftDel	Time OFF	50 ms	50 ms	50 ms	50 ms	10000 ms
.112	PShift wnd	Window length	50 ms	50 ms	500 ms	50 ms	1000 ms

Auxiliary Contact type				Conformity Range		Possible Range	
ID			Default	Min	Max	Min	Max
.099	Contact	Type	n.c. (normally closed)	n.o. (normally opened) n.c. (normally closed)		n.o. (normally opened) n.c. (normally closed) dis. (disabled)	
.100	T Contact	Time OFF	Fixed to 500 ms				
.114	I3 STOP	Type	n.o. (normally opened)	n.o. (normally opened) n.c. (normally closed)		n.o. (normally opened) n.c. (normally closed)	

					dis. (disabled)

Turn-on delay				Conformity Range		Possible Range	
ID			Default	Min	Max	Min	Max
.102	T on delay	Turn on time	60 s	0 s	60 s	0 s	900 s

Password					
ID			Default	Min	Max
.106	PW1	1st digit of Password	0	0	9
.107	PW2	2nd digit of Password	0	0	9
.108	PW3	3rd digit of Password	0	0	9
.109	PW4	4th digit of Password	0	0	9
Remark:		If all 4 digits of the Password are 0 (default setting) the Password request is skipped			

Errorlogic signalled (shown) on output relay R3. On = it is possible to detect this error Off = it is not possible to show this error on relay R3	
Overvoltage LL (UΔ)	on
Undervoltage LL (UΔ)	on
Overvoltage LN (UY)	on
Undervoltage LN (UY)	on
10-min overvoltage (Ū)	on
Overfrequency (f)	on
Underfrequency (f)	on
RoCoF (Rate of Change of Frequency) (Δf)	on
Phase shift (ΔΦ)	on
Remote shutdown / self-test (R)	off
Contactor feedback contact reports closed, although it should be open (C)	on
Contactor feedback contact reports open, although it should be closed (no error, only info) (c)	on

Device Information		
ID		
.105	SN: xxxxxxxxxx	xxxxxxxxxx = Device Serial Number
	SW: aa.dd.ccb	dd: Software version of Display Software aa: Software version of Measuring Software cc: Index of Configuration set b: Version of Configuration set

10.54 ACT-Evoenergy 23 [ID 1180]

Connection Mode			Conformity Range	Possible Range
ID		Default		
.003	Connection	4-wire LL+LN	4-wire LN - 4-wire LL+LN	2-wire LN - 4-wire LL+LN

Nominal Voltage				Conformity Range		Possible Range	
ID			Default	Min	Max	Min	Max
.005	ULN/LL nom	Unom Y Unom Δ	240,01V /417,40V	230,00V /400,00V	240,01V /417,40V	99,99V /173,90V	240,01V /417,40V

Functional Safety			Conformity Range	Possible Range
ID		Default		
.007	Errtol	2ch	2ch, 1ch	2ch, 1ch
Remark:		2ch means: 2 channel with functional safety and 2 auxilliary contacts necessary 1ch means: 1 channel without functional safety and 1 auxilliary contact1 necessary		

Overvoltage1 Line to Line					Conformity Range		Possible Range	
ID				Default	Min	Max	Min	Max
.010	VLL>	Enable function		on	on / off		on / off	
.011	VLL> off	UTHR OFF	%Unom /VUnom	110,00% (459,14V)	110,00% (459,14V)	110,00% (459,14V)	100,00% (417,40V)	135,00% (563,49V)
.012	VLL> off	UTHR ON	%Unom /VUnom	107,00% (446,62V)	107,00% (446,62V)	107,00% (446,62V)	100,00% (417,40V)	135,00% (563,49V)
.013	T VLL>	Time OFF		2000 ms	2000 ms	2000 ms	50 ms	300000 ms
Only active for:		Connection Modes: 3-wire, 4-wire (LN+LL)						

Undervoltage1 Line to Line			Conformity Range		Possible Range	
ID		Default	Min	Max	Min	Max

.014	VLL<	Enable function		on				
.015	VLL< off	UTHR OFF	%Unom /VUnom	75,00% (313,05V)	75,00% (313,05V)	75,00% (313,05V)	0,00% (0,00V)	100,00% (417,40V)
.016	VLL< on	UTHR ON	%Unom /VUnom	78,00% (325,57V)	78,00% (325,57V)	78,00% (325,57V)	0,00% (0,00V)	100,00% (417,40V)
.017	T VLL<	Time OFF		11000 ms	11000 ms	11000 ms	50 ms	300000 ms
Only active for:		Connection Modes: 3-wire, 4-wire (LN+LL)						

Overvoltage1 Line to Neutral					Conformity Range		Possible Range	
ID				Default	Min	Max	Min	Max
.019	V> off	UTHR OFF	%Unom /VUnom	110,00% (264,01V)	110,00% (264,01V)	110,00% (264,01V)	100,00% (240,01V)	135,00% (324,01V)
.020	V> on	UTHR ON	%Unom /VUnom	107,00% (256,81V)	107,00% (256,81V)	107,00% (256,81V)	100,00% (240,01V)	135,00% (324,01V)
.021	T V>	Time OFF		2000 ms	2000 ms	2000 ms	50 ms	300000 ms
Only active for:		Connection Modes: 2-wire, 4-wire (LN), 4-wire (LN+LL)						

Undervoltage1 Line to Neutral					Conformity Range		Possible Range	
ID				Default	Min	Max	Min	Max
.023	V< off	UTHR OFF	%Unom /VUnom	75,00% (180,00V)	75,00% (180,00V)	75,00% (180,00V)	0,00% (0,00V)	100,00% (240,01V)
.024	V< on	UTHR ON	%Unom /VUnom	78,00% (187,20V)	78,00% (187,20V)	78,00% (187,20V)	0,00% (0,00V)	100,00% (240,01V)
.025	T V<	Time OFF		11000 ms	11000 ms	11000 ms	50 ms	300000 ms
Only active for:		Connection Modes: 2-wire, 4-wire (LN), 4-wire (LN+LL))						

Undervoltage2 Line to Line					Conformity Range		Possible Range	
ID				Default	Min	Max	Min	Max
.030	VLL<<	Enable function		on	on / off		on / off	
.031	VLL<< off	UTHR OFF	%Unom /VUnom	70,80% (295,52V)	70,80% (295,52V)	70,80% (295,52V)	0,00% (0,00V)	100,00% (417,40V)

.032	VLL<< on	UTHR ON	%Unom /VUnom	78,00% (325,57V)	78,00% (325,57V)	78,00% (325,57V)	0,00% (0,00V)	100,00% (417,40V)
.033	T VLL<<	Time OFF		2000 ms	2000 ms	2000 ms	50 ms	300000 ms
Only active for:		Connection Modes: 3-wire, 4-wire (LN+LL)						

Undervoltage2 Line to Neutral					Conformity Range		Possible Range	
ID				Default	Min	Max	Min	Max
.038	V<<	Enable function		on	on / off		on / off	
.039	V<< off	UTHR OFF	%Unom /VUnom	70,80% (169,92V)	70,80% (169,92V)	70,80% (169,92V)	0,00% (0,00V)	100,00% (240,01V)
.040	V<< on	UTHR ON	%Unom /VUnom	78,00% (187,20V)	78,00% (187,20V)	78,00% (187,20V)	0,00% (0,00V)	100,00% (240,01V)
.041	T V<<	Time OFF		2000 ms	2000 ms	2000 ms	50 ms	300000 ms
Only active for:		Connection Modes: 2-wire, 4-wire (LN), 4-wire (LN+LL)						

Zero Voltage Line to Neutral					Conformity Range		Possible Range	
ID				Default	Min	Max	Min	Max
.115	Uzero>	Enable Function		off	on / off		on / off	
.116	Uzero> off	UTHR OFF	%Unom /VUnom	20,00% (48,00V)	20,00% (48,00V)	20,00% (48,00V)	1,00% (2,40V)	100,00% (240,01V)
.117	Uzero> on	UTHR ON	%Unom /VUnom	15,00% (36,00V)	15,00% (36,00V)	15,00% (36,00V)	1,00% (2,40V)	100,00% (240,01V)
.118	T Uzero>	Time OFF		1500 ms	1500 ms	1500 ms	0 ms	300000 ms
Only active for:		Connection Modes: 4-wire (LN+LL)						

10 minutes average overvoltage					Conformity Range		Possible Range	
ID				Default	Min	Max	Min	Max
.042	Uavg	Enable function		on	on / off		on / off	
.043	Uavg off	UTHR OFF	%Unom	106,00% (254,41V	106,00% (254,41V	106,00% (254,41V	100,00% (240,01V	135,00% (324,01V

			/VUnom	/442,44V)	/442,44V)	/442,44V)	/417,40V)	/563,49V)
.044	Uavg on	U_{THR} ON	%Unom /VUnom	104,00% (249,61V /434,10V)	104,00% (249,61V /434,10V)	104,00% (249,61V /434,10V)	100,00% (240,01V /417,40V)	135,00% (324,01V /563,49V)

Overfrequency1				Conformity Range		Possible Range	
ID			Default	Min	Max	Min	Max
.055	F> off	f_{THR} OFF	52,000 Hz	52,000 Hz	52,000 Hz	50,000 Hz	55,000 Hz
.056	F> on	f_{THR} ON	51,900 Hz	51,900 Hz	51,900 Hz	50,000 Hz	55,000 Hz
.057	T F>	Time OFF	2000 ms	2000 ms	2000 ms	100 ms	300000 ms

Underfrequency1				Conformity Range		Possible Range	
ID			Default	Min	Max	Min	Max
.059	F< off	f_{THR} OFF	47,000 Hz	47,000 Hz	47,000 Hz	40,000 Hz	50,000 Hz
.060	F< on	f_{THR} ON	47,500 Hz	47,500 Hz	47,500 Hz	40,000 Hz	50,000 Hz
.061	T F<	Time OFF	2000 ms	2000 ms	2000 ms	100 ms	300000 ms

Frequency measuring in general				Conformity Range			
ID			Default	Min	Max		
.113	F wnd	Window length	100 ms	100 ms	100 ms		

Rate of Change of Frequency (RoCoF)				Conformity Range		Possible Range	
ID			Default	Min	Max	Min	Max
.090	RoCoF	En Function	on	on / off		on / off	
.091	RoCoF off	$RoCoF_{THR}$ OFF	1000 mHz/s	1000 mHz/s	1000 mHz/s	10 mHz/s	5000 mHz/s

.092	RoCoF on	RoCoF$_{THR}$ ON	950 mHz/s	950 mHz/s	950 mHz/s	10 mHz/s	4950 mHz/s
.093	RoCoFDelay	Time OFF	1850 ms	1850 ms	1850 ms	100 ms	10000 ms
.111	RoCoF wnd	Window length	225 ms	100 ms	1000 ms	100 ms	1000 ms

Phase Shift (PShift)				Conformity Range		Possible Range	
ID			Default	Min	Max	Min	Max
.094	PShift	Enable Function	on	on / off		on / off	
.095	PShift off	PShift $_{THR}$ OFF	10,0 °	10,0 °	10,0 °	1,0 °	25,0 °
.096	Pshift on	PShift $_{THR}$ ON	8,0 °	8,0 °	8,0 °	1,0 °	24,0 °
.097	PshiftDel	Time OFF	50 ms	50 ms	50 ms	50 ms	10000 ms
.112	PShift wnd	Window length	50 ms	50 ms	500 ms	50 ms	1000 ms

Auxiliary Contact type				Conformity Range		Possible Range	
ID			Default	Min	Max	Min	Max
.099	Contact	Type	n.c. (normally closed)	n.o. (normally opened) n.c. (normally closed)		n.o. (normally opened) n.c. (normally closed) dis. (disabled)	
.100	T Contact	Time OFF	Fixed to 500 ms				
.114	I3 STOP	Type	n.o. (normally opened)	n.o. (normally opened) n.c. (normally closed)		n.o. (normally opened) n.c. (normally closed) dis. (disabled)	

Turn-on delay				Conformity Range		Possible Range	
ID			Default	Min	Max	Min	Max
.102	T on delay	Turn on time	60 s	0 s	60 s	0 s	900 s

Password					
ID			Default	Min	Max
.106	PW1	1st digit of Password	0	0	9

.107	PW2	2nd digit of Password	0	0	9
.108	PW3	3rd digit of Password	0	0	9
.109	PW4	4th digit of Password	0	0	9
Remark:		If all 4 digits of the Password are 0 (default setting) the Password request is skipped			

Errorlogic signalled (shown) on output relay R3. On = it is possible to detect this error Off = it is not possible to show this error on relay R3	
Overvoltage LL (UΔ)	on
Undervoltage LL (UΔ)	on
Overvoltage LN (UY)	on
Undervoltage LN (UY)	on
10-min overvoltage (Ū)	on
Overfrequency (f)	on
Underfrequency (f)	on
RoCoF (Rate of Change of Frequency) (Δf)	on
Phase shift (ΔΦ)	on
Remote shutdown / self-test (R)	off
Contactor feedback contact reports closed, although it should be open (C)	on
Contactor feedback contact reports open, although it should be closed (no error, only info) (c)	on

Device Information		
ID		
.105	SN: xxxxxxxxxx SW: aa.dd.ccb	xxxxxxxxxx = Device Serial Number dd: Software version of Display Software aa: Software version of Measuring Software cc: Index of Configuration set b: Version of Configuration set

10.55 QLD-Energex 23 [ID 1185]

Connection Mode			Conformity Range	Possible Range
ID		Default		
.003	Connection	4-wire LL+LN	4-wire LN - 4-wire LL+LN	2-wire LN - 4-wire LL+LN

Nominal Voltage				Conformity Range		Possible Range	
ID			Default	Min	Max	Min	Max
.005	ULN/LL nom	Unom Y Unom Δ	240,01V /417,40V	230,00V /400,00V	240,01V /417,40V	99,99V /173,90V	240,01V /417,40V

Functional Safety			Conformity Range	Possible Range
ID		Default		
.007	Errtol	2ch	2ch, 1ch	2ch, 1ch
Remark:		2ch means: 2 channel with functional safety and 2 auxilliary contacts necessary 1ch means: 1 channel without functional safety and 1 auxilliary contact1 necessary		

Overvoltage1 Line to Line					Conformity Range		Possible Range	
ID				Default	Min	Max	Min	Max
.010	VLL>	Enable function		on	on / off		on / off	
.011	VLL> off	UTHR OFF	%Unom /VUnom	114,00% (475,84V)	114,00 % (475,84 V)	114,00% (475,84V)	100,00% (417,40V)	135,00% (563,49V)
.012	VLL> off	UTHR ON	%Unom /VUnom	111,00% (463,31V)	111,00 % (463,31 V)	111,00% (463,31V)	100,00% (417,40V)	135,00% (563,49V)
.013	T VLL>	Time OFF		200 ms	200 ms	200 ms	50 ms	300000 ms
Only active for:		Connection Modes: 3-wire, 4-wire (LN+LL)						

Undervoltage1 Line to Line				Conformity Range		Possible Range	
ID			Default	Min	Max	Min	Max
.014	VLL<	Enable function	on				

.015	VLL< off	U_{THR} OFF	%Unom /VUnom	75,00% (313,05V)	75,00% (313,05V)	75,00% (313,05V)	0,00% (0,00V)	100,00% (417,40V)
.016	VLL< on	U_{THR} ON	%Unom /VUnom	78,00% (325,57V)	78,00% (325,57V)	78,00% (325,57V)	0,00% (0,00V)	100,00% (417,40V)
.017	T VLL<	Time OFF		3000 ms	3000 ms	3000 ms	50 ms	300000 ms
Only active for:		Connection Modes: 3-wire, 4-wire (LN+LL)						

Overvoltage1 Line to Neutral					Conformity Range		Possible Range	
ID				Default	Min	Max	Min	Max
.019	V> off	U_{THR} OFF	%Unom /VUnom	114,00% (273,61V)	114,00% (273,61V)	114,00% (273,61V)	100,00% (240,01V)	135,00% (324,01V)
.020	V> on	U_{THR} ON	%Unom /VUnom	111,00% (266,41V)	111,00% (266,41V)	111,00% (266,41V)	100,00% (240,01V)	135,00% (324,01V)
.021	T V>	Time OFF		200 ms	200 ms	200 ms	50 ms	300000 ms
Only active for:		Connection Modes: 2-wire, 4-wire (LN), 4-wire (LN+LL)						

Undervoltage1 Line to Neutral					Conformity Range		Possible Range	
ID				Default	Min	Max	Min	Max
.023	V< off	U_{THR} OFF	%Unom /VUnom	75,00% (180,00V)	75,00% (180,00V)	75,00% (180,00V)	0,00% (0,00V)	100,00% (240,01V)
.024	V< on	U_{THR} ON	%Unom /VUnom	78,00% (187,20V)	78,00% (187,20V)	78,00% (187,20V)	0,00% (0,00V)	100,00% (240,01V)
.025	T V<	Time OFF		3000 ms	3000 ms	3000 ms	50 ms	300000 ms
Only active for:		Connection Modes: 2-wire, 4-wire (LN), 4-wire (LN+LL))						

Undervoltage2 Line to Line				Conformity Range		Possible Range	
ID			Default	Min	Max	Min	Max
.030	VLL<<	Enable function	on	on / off		on / off	

.031	VLL<< off	UTHR OFF	%Unom /VUnom	29,20% (121,88V)	29,20% (121,88V)	29,20% (121,88V)	0,00% (0,00V)	100,00% (417,40V)
.032	VLL<< on	UTHR ON	%Unom /VUnom	78,00% (325,57V)	78,00% (325,57V)	78,00% (325,57V)	0,00% (0,00V)	100,00% (417,40V)
.033	T VLL<<	Time OFF		3000 ms	2000 ms	2000 ms	50 ms	300000 ms
Only active for:		Connection Modes: 3-wire, 4-wire (LN+LL)						

Undervoltage2 Line to Neutral					Conformity Range		Possible Range	
ID				Default	Min	Max	Min	Max
.038	V<<	Enable function		on	on / off		on / off	
.039	V<< off	UTHR OFF	%Unom /VUnom	29,20% (70,08V)	29,20% (70,08V)	29,20% (70,08V)	0,00% (0,00V)	100,00% (240,01V)
.040	V<< on	UTHR ON	%Unom /VUnom	78,00% (187,20V)	78,00% (187,20V)	78,00% (187,20V)	0,00% (0,00V)	100,00% (240,01V)
.041	T V<<	Time OFF		3000 ms	3000 ms	3000 ms	50 ms	300000 ms
Only active for:		Connection Modes: 2-wire, 4-wire (LN), 4-wire (LN+LL)						

Zero Voltage Line to Neutral					Conformity Range		Possible Range	
ID				Default	Min	Max	Min	Max
.115	Uzero>	Enable Function		off	on / off		on / off	
.116	Uzero> off	UTHR OFF	%Unom /VUnom	20,00% (48,00V)	20,00% (48,00V)	20,00% (48,00V)	1,00% (2,40V)	100,00% (240,01V)
.117	Uzero> on	UTHR ON	%Unom /VUnom	15,00% (36,00V)	15,00% (36,00V)	15,00% (36,00V)	1,00% (2,40V)	100,00% (240,01V)
.118	T Uzero>	Time OFF		1500 ms	1500 ms	1500 ms	0 ms	300000 ms
Only active for:		Connection Modes: 4-wire (LN+LL)						

Overfrequency1			Conformity Range		Possible Range	
ID		Default	Min	Max	Min	Max

.055	F> off	f_{THR} OFF	52,000 Hz	52,000 Hz	52,000 Hz	50,000 Hz	55,000 Hz
.056	F> on	f_{THR} ON	51,900 Hz	51,900 Hz	51,900 Hz	50,000 Hz	55,000 Hz
.057	T F>	Time OFF	2000 ms	2000 ms	2000 ms	100 ms	300000 ms

Underfrequency1				Conformity Range		Possible Range	
ID			Default	Min	Max	Min	Max
.059	F< off	f_{THR} OFF	47,000 Hz	47,000 Hz	47,000 Hz	40,000 Hz	50,000 Hz
.060	F< on	f_{THR} ON	47,500 Hz	47,500 Hz	47,500 Hz	40,000 Hz	50,000 Hz
.061	T F<	Time OFF	3000 ms	3000 ms	3000 ms	100 ms	300000 ms

Frequency measuring in general				Conformity Range			
ID			Default	Min	Max		
.113	F wnd	Window length	100 ms	100 ms	100 ms		

Rate of Change of Frequency (RoCoF)				Conformity Range		Possible Range	
ID			Default	Min	Max	Min	Max
.090	RoCoF	En Function	on	on / off		on / off	
.091	RoCoF off	$RoCoF_{THR}$ OFF	4000 mHz/s	4000 mHz/s	4000 mHz/s	10 mHz/s	5000 mHz/s
.092	RoCoF on	$RoCoF_{THR}$ ON	3950 mHz/s	3950 mHz/s	3950 mHz/s	10 mHz/s	4950 mHz/s
.093	RoCoFDelay	Time OFF	350 ms	350 ms	350 ms	100 ms	10000 ms
.111	RoCoF wnd	Window length	225 ms	100 ms	1000 ms	100 ms	1000 ms

Auxiliary Contact type			Conformity Range		Possible Range	
ID		Default	Min	Max	Min	Max

.099	Contact	Type	n.c. (normally closed)	n.o. (normally opened) n.c. (normally closed)	n.o. (normally opened) n.c. (normally closed) dis. (disabled)
.100	T Contact	Time OFF	Fixed to 500 ms		
.114	I3 STOP	Type	n.o. (normally opened)	n.o. (normally opened) n.c. (normally closed)	n.o. (normally opened) n.c. (normally closed) dis. (disabled)

Turn-on delay				Conformity Range		Possible Range	
ID			Default	Min	Max	Min	Max
.102	T on delay	Turn on time	60 s	0 s	60 s	0 s	900 s

Password					
ID			Default	Min	Max
.106	PW1	1st digit of Password	0	0	9
.107	PW2	2nd digit of Password	0	0	9
.108	PW3	3rd digit of Password	0	0	9
.109	PW4	4th digit of Password	0	0	9
Remark:	If all 4 digits of the Password are 0 (default setting) the Password request is skipped				

Errorlogic signalled (shown) on output relay R3. On = it is possible to detect this error Off = it is not possible to show this error on relay R3	
Overvoltage LL (UΔ)	on
Undervoltage LL (UΔ)	on
Overvoltage LN (UY)	on
Undervoltage LN (UY)	on
10-min overvoltage (Ū)	on
Overfrequency (f)	on
Underfrequency (f)	on
RoCoF (Rate of Change of Frequency) (Δf)	on

Phase shift (ΔΦ)	on
Remote shutdown / self-test (R)	off
Contactor feedback contact reports closed, although it should be open (C)	on
Contactor feedback contact reports open, although it should be closed (no error, only info) (c)	on

Device Information		
ID		
.105	SN: xxxxxxxxxx	xxxxxxxxxx = Device Serial Number
	SW: aa.dd.ccb	dd: Software version of Display Software aa: Software version of Measuring Software cc: Index of Configuration set b: Version of Configuration set

10.56 QLD-Ergon 23 [ID 1190]

Connection Mode			Conformity Range	Possible Range
ID		Default		
.003	Connection	4-wire LL+LN	4-wire LN - 4-wire LL+LN	2-wire LN - 4-wire LL+LN

Nominal Voltage				Conformity Range		Possible Range	
ID			Default	Min	Max	Min	Max
.005	ULN/LL nom	Unom Y Unom Δ	240,01V /417,40V	230,00V /400,00V	240,01V /417,40V	99,99V /173,90V	240,01V /417,40V

Functional Safety			Conformity Range	Possible Range
ID		Default		
.007	Errtol	2ch	2ch, 1ch	2ch, 1ch
Remark:		2ch means: 2 channel with functional safety and 2 auxilliary contacts necessary 1ch means: 1 channel without functional safety and 1 auxilliary contact1 necessary		

Overvoltage1 Line to Line					Conformity Range		Possible Range	
ID				Default	Min	Max	Min	Max
.010	VLL>	Enable function		on	on / off		on / off	
.011	VLL> off	UTHR OFF	%Unom /VUnom	114,00% (475,84V)	114,00% (475,84V)	114,00% (475,84V)	100,00% (417,40V)	135,00% (563,49V)
.012	VLL> off	UTHR ON	%Unom /VUnom	111,00% (463,31V)	111,00% (463,31V)	111,00% (463,31V)	100,00% (417,40V)	135,00% (563,49V)
.013	T VLL>	Time OFF		200 ms	200 ms	200 ms	50 ms	300000 ms
Only active for:		Connection Modes: 3-wire, 4-wire (LN+LL)						

Undervoltage1 Line to Line			Conformity Range		Possible Range	
ID			Default	Min	Max	Min	Max
.014	VLL<	Enable function	on			

.015	VLL< off	UTHR OFF	%Unom /VUnom	75,00% (313,05V)	75,00% (313,05V)	75,00% (313,05V)	0,00% (0,00V)	100,00% (417,40V)
.016	VLL< on	UTHR ON	%Unom /VUnom	78,00% (325,57V)	78,00% (325,57V)	78,00% (325,57V)	0,00% (0,00V)	100,00% (417,40V)
.017	T VLL<	Time OFF		3000 ms	3000 ms	3000 ms	50 ms	300000 ms
Only active for:		Connection Modes: 3-wire, 4-wire (LN+LL)						

Overvoltage1 Line to Neutral					Conformity Range		Possible Range	
ID				Default	Min	Max	Min	Max
.019	V> off	UTHR OFF	%Unom /VUnom	114,00% (273,61V)	114,00% (273,61V)	114,00% (273,61V)	100,00% (240,01V)	135,00% (324,01V)
.020	V> on	UTHR ON	%Unom /VUnom	111,00% (266,41V)	111,00% (266,41V)	111,00% (266,41V)	100,00% (240,01V)	135,00% (324,01V)
.021	T V>	Time OFF		200 ms	200 ms	200 ms	50 ms	300000 ms
Only active for:		Connection Modes: 2-wire, 4-wire (LN), 4-wire (LN+LL)						

Undervoltage1 Line to Neutral					Conformity Range		Possible Range	
ID				Default	Min	Max	Min	Max
.023	V< off	UTHR OFF	%Unom /VUnom	75,00% (180,00V)	75,00% (180,00V)	75,00% (180,00V)	0,00% (0,00V)	100,00% (240,01V)
.024	V< on	UTHR ON	%Unom /VUnom	78,00% (187,20V)	78,00% (187,20V)	78,00% (187,20V)	0,00% (0,00V)	100,00% (240,01V)
.025	T V<	Time OFF		3000 ms	3000 ms	3000 ms	50 ms	300000 ms
Only active for:		Connection Modes: 2-wire, 4-wire (LN), 4-wire (LN+LL))						

Undervoltage2 Line to Line					Conformity Range		Possible Range	
ID				Default	Min	Max	Min	Max
.030	VLL<<	Enable function		on	on / off		on / off	

.031	VLL<< off	UTHR OFF	%Unom /VUnom	29,20% (121,88V)	29,20% (121,88V)	29,20% (121,88V)	0,00% (0,00V)	100,00% (417,40V)
.032	VLL<< on	UTHR ON	%Unom /VUnom	78,00% (325,57V)	78,00% (325,57V)	78,00% (325,57V)	0,00% (0,00V)	100,00% (417,40V)
.033	T VLL<<	Time OFF		3000 ms	3000 ms	3000 ms	50 ms	300000 ms
Only active for:		Connection Modes: 3-wire, 4-wire (LN+LL)						

Undervoltage2 Line to Neutral					Conformity Range		Possible Range	
ID				Default	Min	Max	Min	Max
.038	V<<	Enable function		on	on / off		on / off	
.039	V<< off	UTHR OFF	%Unom /VUnom	29,20% (70,08V)	29,20% (70,08V)	29,20% (70,08V)	0,00% (0,00V)	100,00% (240,01V)
.040	V<< on	UTHR ON	%Unom /VUnom	78,00% (187,20V)	78,00% (187,20V)	78,00% (187,20V)	0,00% (0,00V)	100,00% (240,01V)
.041	T V<<	Time OFF		3000 ms	3000 ms	3000 ms	50 ms	300000 ms
Only active for:		Connection Modes: 2-wire, 4-wire (LN), 4-wire (LN+LL)						

Zero Voltage Line to Neutral					Conformity Range		Possible Range	
ID				Default	Min	Max	Min	Max
.115	Uzero>	Enable Function		off	on / off		on / off	
.116	Uzero> off	UTHR OFF	%Unom /VUnom	20,00% (48,00V)	20,00% (48,00V)	20,00% (48,00V)	1,00% (2,40V)	100,00% (240,01V)
.117	Uzero> on	UTHR ON	%Unom /VUnom	15,00% (36,00V)	15,00% (36,00V)	15,00% (36,00V)	1,00% (2,40V)	100,00% (240,01V)
.118	T Uzero>	Time OFF		1500 ms	1500 ms	1500 ms	0 ms	300000 ms
Only active for:		Connection Modes: 4-wire (LN+LL)						

Overfrequency1			Conformity Range		Possible Range	
ID		Default	Min	Max	Min	Max

.055	F> off	f_{THR} OFF	52,000 Hz	52,000 Hz	52,000 Hz	50,000 Hz	55,000 Hz
.056	F> on	f_{THR} ON	51,900 Hz	51,900 Hz	51,900 Hz	50,000 Hz	55,000 Hz
.057	T F>	Time OFF	2000 ms	2000 ms	2000 ms	100 ms	300000 ms

Underfrequency1				Conformity Range		Possible Range	
ID			Default	Min	Max	Min	Max
.059	F< off	f_{THR} OFF	47,000 Hz	47,000 Hz	47,000 Hz	40,000 Hz	50,000 Hz
.060	F< on	f_{THR} ON	47,500 Hz	47,500 Hz	47,500 Hz	40,000 Hz	50,000 Hz
.061	T F<	Time OFF	3000 ms	3000 ms	3000 ms	100 ms	300000 ms

Frequency measuring in general				Conformity Range			
ID			Default	Min	Max		
.113	F wnd	Window length	100 ms	100 ms	100 ms		

Rate of Change of Frequency (RoCoF)				Conformity Range		Possible Range	
ID			Default	Min	Max	Min	Max
.090	RoCoF	En Function	on	on / off		on / off	
.091	RoCoF off	RoCoF$_{THR}$ OFF	4000 mHz/s	4000 mHz/s	4000 mHz/s	10 mHz/s	5000 mHz/s
.092	RoCoF on	RoCoF$_{THR}$ ON	3950 mHz/s	3950 mHz/s	3950 mHz/s	10 mHz/s	4950 mHz/s
.093	RoCoFDelay	Time OFF	350 ms	350 ms	350 ms	100 ms	10000 ms
.111	RoCoF wnd	Window length	225 ms	100 ms	1000 ms	100 ms	1000 ms

Auxiliary Contact type				Conformity Range		Possible Range	
ID			Default	Min	Max	Min	Max
.099	Contact	Type	n.c. (normally closed)	n.o. (normally opened) n.c. (normally closed)		n.o. (normally opened) n.c. (normally closed) dis. (disabled)	

.100	T Contact	Time OFF	Fixed to 500 ms		
.114	I3 STOP	Type	n.o. (normally opened)	n.o. (normally opened) n.c. (normally closed)	n.o. (normally opened) n.c. (normally closed) dis. (disabled)

Turn-on delay				Conformity Range		Possible Range	
ID			Default	Min	Max	Min	Max
.102	T on delay	Turn on time	60 s	0 s	60 s	0 s	900 s

Password					
ID			Default	Min	Max
.106	PW1	1st digit of Password	0	0	9
.107	PW2	2nd digit of Password	0	0	9
.108	PW3	3rd digit of Password	0	0	9
.109	PW4	4th digit of Password	0	0	9
Remark:		If all 4 digits of the Password are 0 (default setting) the Password request is skipped			

Errorlogic signalled (shown) on output relay R3. On = it is possible to detect this error Off = it is not possible to show this error on relay R3	
Overvoltage LL (UΔ)	on
Undervoltage LL (UΔ)	on
Overvoltage LN (UY)	on
Undervoltage LN (UY)	on
10-min overvoltage (Ū)	on
Overfrequency (f)	on
Underfrequency (f)	on
RoCoF (Rate of Change of Frequency) (Δf)	on
Phase shift (ΔΦ)	on
Remote shutdown / self-test (R)	off
Contactor feedback contact reports closed, although it should be open (C)	on

Contactor feedback contact reports open, although it should be closed (no error, only info) (c)	on

Device Information		
ID		
.105	SN: xxxxxxxxxx SW: aa.dd.ccb	xxxxxxxxxx = Device Serial Number dd: Software version of Display Software aa: Software version of Measuring Software cc: Index of Configuration set b: Version of Configuration set

10.57 SA-Power networks23 [ID 1195]

Connection Mode			Conformity Range	Possible Range
ID		Default		
.003	Connection	4-wire LL+LN	4-wire LN - 4-wire LL+LN	2-wire LN - 4-wire LL+LN

Nominal Voltage				Conformity Range		Possible Range	
ID			Default	Min	Max	Min	Max
.005	ULN/LL nom	Unom Y Unom Δ	230,00V /400,00V	230,00V /400,00V	240,01V /417,40V	99,99V /173,90V	240,01V /417,40V

Functional Safety			Conformity Range	Possible Range
ID		Default		
.007	Errtol	2ch	2ch, 1ch	2ch, 1ch
Remark:		2ch means: 2 channel with functional safety and 2 auxilliary contacts necessary 1ch means: 1 channel without functional safety and 1 auxilliary contact1 necessary		

Overvoltage1 Line to Line					Conformity Range		Possible Range	
ID				Default	Min	Max	Min	Max
.010	VLL>	Enable function		on	on / off		on / off	
.011	VLL> off	UTHR OFF	%Unom /VUnom	113,00% (452,00V)	113,00 % (452,00 V)	113,00% (452,00V)	100,00% (400,00V)	135,00% (540,00V)
.012	VLL> on	UTHR ON	%Unom /VUnom	110,00% (440,00V)	110,00 % (440,00 V)	110,00% (440,00V)	100,00% (400,00V)	135,00% (540,00V)
.013	T VLL>	Time OFF		2000 ms	2000 ms	2000 ms	50 ms	300000 ms
Only active for:		Connection Modes: 3-wire, 4-wire (LN+LL)						

Undervoltage1 Line to Line			Conformity Range		Possible Range	
ID		Default	Min	Max	Min	Max

.014	VLL<	Enable function		on	on / off		on / off	
.015	VLL< off	UTHR OFF	%Unom /VUnom	79,00% (316,00V)	79,00% (316,00V)	79,00% (316,00V)	0,00% (0,00V)	100,00% (400,00V)
.016	VLL< on	UTHR ON	%Unom /VUnom	81,00% (324,00V)	81,00% (324,00V)	81,00% (324,00V)	0,00% (0,00V)	100,00% (400,00V)
.017	T VLL<	Time OFF		2000 ms	2000 ms	2000 ms	50 ms	300000 ms
Only active for:		Connection Modes: 3-wire, 4-wire (LN+LL)						

Overvoltage1 Line to Neutral					Conformity Range		Possible Range	
ID				Default	Min	Max	Min	Max
.019	V> off	UTHR OFF	%Unom /VUnom	113,00% (259,90V)	113,00% (259,90V)	113,00% (259,90V)	100,00% (230,00V)	135,00% (310,50V)
.020	V> on	UTHR ON	%Unom /VUnom	110,00% (253,00V)	110,00% (253,00V)	110,00% (253,00V)	100,00% (230,00V)	135,00% (310,50V)
.021	T V>	Time OFF		2000 ms	2000 ms	2000 ms	50 ms	300000 ms
Only active for:		Connection Modes: 2-wire, 4-wire (LN), 4-wire (LN+LL)						

Undervoltage1 Line to Neutral					Conformity Range		Possible Range	
ID				Default	Min	Max	Min	Max
.023	V< off	UTHR OFF	%Unom /VUnom	79,00% (181,70V)	79,00% (181,70V)	79,00% (181,70V)	0,00% (0,00V)	100,00% (230,00V)
.024	V< on	UTHR ON	%Unom /VUnom	81,00% (186,30V)	81,00% (186,30V)	81,00% (186,30V)	0,00% (0,00V)	100,00% (230,00V)
.025	T V<	Time OFF		2000 ms	2000 ms	2000 ms	50 ms	300000 ms
Only active for:		Connection Modes: 2-wire, 4-wire (LN), 4-wire (LN+LL))						

Zero Voltage Line to Neutral			Conformity Range		Possible Range	
ID		Default	Min	Max	Min	Max

.115	Uzero>	Enable Function		off	on / off		on / off	
.116	Uzero> off	U_{THR} OFF	%Unom /VUnom	20,00% (46,00V)	20,00% (46,00V)	20,00% (46,00V)	1,00% (2,30V)	100,00% (230,00V)
.117	Uzero> on	U_{THR} ON	%Unom /VUnom	15,00% (34,50V)	15,00% (34,50V)	15,00% (34,50V)	1,00% (2,30V)	100,00% (230,00V)
.118	T Uzero>	Time OFF		1500 ms	1500 ms	1500 ms	0 ms	300000 ms
Only active for:		Connection Modes: 4-wire (LN+LL)						

10 minutes average overvoltage					Conformity Range		Possible Range	
ID				Default	Min	Max	Min	Max
.042	Uavg	Enable function		on				
.043	Uavg off	U_{THR} OFF	%Unom /VUnom	112,00% (257,60V /448,00V)	112,00% (257,60V /448,00V)	112,00% (257,60V /448,00V)	100,00% (230,00V /400,00V)	135,00% (310,50V /540,00V)
.044	Uavg on	U_{THR} ON	%Unom /VUnom	110,00% (253,00V /440,00V)	110,00% (253,00V /440,00V)	110,00% (253,00V /440,00V)	100,00% (230,00V /400,00V)	135,00% (310,50V /540,00V)

Overfrequency1				Conformity Range		Possible Range	
ID			Default	Min	Max	Min	Max
.055	F> off	f_{THR} OFF	52,000 Hz	52,000 Hz	52,000 Hz	50,000 Hz	55,000 Hz
.056	F> on	f_{THR} ON	51,900 Hz	51,900 Hz	51,900 Hz	50,000 Hz	55,000 Hz
.057	T F>	Time OFF	2000 ms	2000 ms	2000 ms	100 ms	300000 ms

Underfrequency1				Conformity Range		Possible Range	
ID			Default	Min	Max	Min	Max
.059	F< off	f_{THR} OFF	47,000 Hz	47,000 Hz	47,000 Hz	40,000 Hz	50,000 Hz
.060	F< on	f_{THR} ON	47,500 Hz	47,500 Hz	47,500 Hz	40,000 Hz	50,000 Hz

.061	T F<	Time OFF	2000 ms	2000 ms	2000 ms	100 ms	300000 ms

Frequency measuring in general				Conformity Range			
ID			Default	Min	Max		
.113	F wnd	Window length	100 ms	100 ms	100 ms		

Rate of Change of Frequency (RoCoF)				Conformity Range		Possible Range	
ID			Default	Min	Max	Min	Max
.090	RoCoF	En Function	on	on / off		on / off	
.091	RoCoF off	RoCoF$_{THR}$ OFF	4000 mHz/s	4000 mHz/s	4000 mHz/s	10 mHz/s	5000 mHz/s
.092	RoCoF on	RoCoF$_{THR}$ ON	3950 mHz/s	3950 mHz/s	3950 mHz/s	10 mHz/s	4950 mHz/s
.093	RoCoFDelay	Time OFF	100 ms	850 ms	850 ms	100 ms	10000 ms
.111	RoCoF wnd	Window length	225 ms	100 ms	1000 ms	100 ms	1000 ms

Auxiliary Contact type				Conformity Range		Possible Range	
ID			Default	Min	Max	Min	Max
.099	Contact	Type	n.c. (normally closed)	n.o. (normally opened) n.c. (normally closed)		n.o. (normally opened) n.c. (normally closed) dis. (disabled)	
.100	T Contact	Time OFF	Fixed to 500 ms				
.114	I3 STOP	Type	n.o. (normally opened)	n.o. (normally opened) n.c. (normally closed)		n.o. (normally opened) n.c. (normally closed) dis. (disabled)	

Turn-on delay				Conformity Range		Possible Range	
ID			Default	Min	Max	Min	Max
.102	T on delay	Turn on time	60 s	0 s	60 s	0 s	900 s

Password	

ID			Default	Min	Max
.106	PW1	1st digit of Password	0	0	9
.107	PW2	2nd digit of Password	0	0	9
.108	PW3	3rd digit of Password	0	0	9
.109	PW4	4th digit of Password	0	0	9
Remark:		If all 4 digits of the Password are 0 (default setting) the Password request is skipped			

Errorlogic signalled (shown) on output relay R3. On = it is possible to detect this error Off = it is not possible to show this error on relay R3	
Overvoltage LL (UΔ)	on
Undervoltage LL (UΔ)	on
Overvoltage LN (UY)	on
Undervoltage LN (UY)	on
10-min overvoltage (Ū)	on
Overfrequency (f)	on
Underfrequency (f)	on
RoCoF (Rate of Change of Frequency) (Δf)	on
Phase shift (ΔΦ)	on
Remote shutdown / self-test (R)	off
Contactor feedback contact reports closed, although it should be open (C)	on
Contactor feedback contact reports open, although it should be closed (no error, only info) (c)	on

Device Information		
ID		
.105	SN: xxxxxxxxxx	xxxxxxxxxx = Device Serial Number
	SW: aa.dd.ccb	dd: Software version of Display Software aa: Software version of Measuring Software cc: Index of Configuration set

		b: Version of Configuration set

10.58 NRS 097-2-1:2017 [ID 1000]

Connection Mode			Conformity Range	Possible Range
ID		Default		
.003	Connection	4-wire (LN)	2-wire, 3-wire, 4-wire (LN), 4-wire (LN+LL)	2-wire, 3-wire, 4-wire (LN), 4-wire (LN+LL)

Nominal Voltage					Conformity Range		Possible Range	
ID				Default	Min	Max	Min	Max
.005	ULN/LL nom	Unom Y	V	230.0	230.0	230.0	28.8	250.0
		Unom Δ	V	400.0	400.0	400.0	50.0	434.8

Functional Safety			Conformity Range	Possible Range
ID		Default		
.007	Errtol	Fixed to 2ch		
Remark:		2ch means: 2 channel with functional safety and 2 auxilliary contacts necessary		

Overvoltage1 Line to Line					Conformity Range		Possible Range	
ID				Default	Min	Max	Min	Max
.011	ULL>1 OFF	UTHR OFF	%Unom	111	111	111	100	135
.012	ULL>1 ON	UTHR ON	%Unom	109	100	109	100	135
.013	ULL>1 T	Time OFF	ms	2000	200	2000	200	60000
Comment:		ULL>1 OFF has a fixed offset of 0.5% UNOM subtracted from the displayed value						
Only active for:		Connection Modes: 3-wire, 4-wire (LN+LL)						

Undervoltage1 Line to Line					Conformity Range		Possible Range	
ID				Default	Min	Max	Min	Max
.015	ULL<1 OFF	UTHR OFF	%Unom	84	84	84	10	100
.016	ULL<1 ON	UTHR ON	%Unom	86	86	100	10	100
.017	ULL<1 T	Time OFF	ms	10000	600	10000	200	60000
Comment:		ULL<1 OFF has a fixed offset of 0.5% UNOM added to the displayed value						
Only active for:		Connection Modes: 3-wire, 4-wire (LN+LL)						

Overvoltage1 Line to Neutral					Conformity Range		Possible Range	
ID				Default	Min	Max	Min	Max
.019	ULN>1 OFF	U_{THR} OFF	%Unom	111	111	111	100	135
.020	ULN>1 ON	U_{THR} ON	%Unom	109	100	109	100	135
.021	ULN>1 T	Time OFF	ms	2000	200	2000	200	60000
Comment:		ULN>1 OFF has a fixed offset of 0.5% U_{NOM} subtracted from the displayed value						
Only active for:		Connection Modes: 2-wire, 4-wire (LN), 4-wire (LN+LL)						

Undervoltage1 Line to Neutral					Conformity Range		Possible Range	
ID				Default	Min	Max	Min	Max
.023	ULN<1 OFF	U_{THR} OFF	%Unom	84	84	84	10	100
.024	ULN<1 ON	U_{THR} ON	%Unom	86	86	100	10	100
.025	ULN<1 T	Time OFF	ms	10000	600	10000	200	60000
Comment:		ULN<1 OFF has a fixed offset of 0.5% U_{NOM} added to the displayed value						
Only active for:		Connection Modes: 2-wire, 4-wire (LN), 4-wire (LN+LL))						

Overvoltage2 Line to Line					Conformity Range		Possible Range	
ID				Default	Min	Max	Min	Max
.027	ULL>2 OFF	U_{THR} OFF	%Unom	121	121	121	100	135
.028	ULL>2 ON	U_{THR} ON	%Unom	119	100	119	100	135
.029	ULL>2 T	Time OFF	ms	160	110	160	110	60000
Comment:		ULL>2 OFF has a fixed offset of 0.5% U_{NOM} subtracted from the displayed value						
Only active for:		Connection Modes: 3-wire, 4-wire (LN+LL)						

Undervoltage2 Line to Line					Conformity Range		Possible Range	
ID				Default	Min	Max	Min	Max
.031	ULL<2 OFF	U_{THR} OFF	%Unom	49	49	49	10	100
.032	ULL<2 ON	U_{THR} ON	%Unom	51	51	100	10	100
.033	ULL<2 T	Time OFF	ms	200	150	200	150	60000
Comment:		ULL<2 OFF has a fixed offset of 0.5% U_{NOM} added to the displayed value						
Only active for:		Connection Modes: 3-wire, 4-wire (LN+LL)						

Overvoltage2 Line to Neutral					Conformity Range		Possible Range	
ID				Default	Min	Max	Min	Max
.035	ULN>2 OFF	U_{THR} OFF	%Unom	121	121	121	100	135
.036	ULN>2 ON	U_{THR} ON	%Unom	119	100	119	100	135
.037	ULN>2 T	Time OFF	ms	160	110	160	110	60000
Comment:		ULN>2 OFF has a fixed offset of 0.5% U_{NOM} added to the displayed value						
Only active for:		Connection Modes: 2-wire, 4-wire (LN), 4-wire (LN+LL)						

Undervoltage2 Line to Neutral					Conformity Range		Possible Range	
ID				Default	Min	Max	Min	Max
.039	ULN<2 OFF	U_{THR} OFF	%Unom	49	49	49	10	100
.040	ULN<2 ON	U_{THR} ON	%Unom	51	51	100	10	100
.041	ULN<2 T	Time OFF	ms	200	150	200	150	60000
Comment:		ULN<2 OFF has a fixed offset of 0.5% U_{NOM} added to the displayed value						
Only active for:		Connection Modes: 2-wire, 4-wire (LN), 4-wire (LN+LL)						

Overfrequency1					Conformity Range		Possible Range	
ID				Default	Min	Max	Min	Max
.055	f>1 OFF	f_{THR} OFF	Hz	52.00	52.00	52.00	50.00	60.00
.056	f>1 ON	f_{THR} ON	Hz	50.50	50.00	50.50	50.00	60.00
.057	f>1 T	Time OFF	ms	4000	4000	4000	200	60000

Underfrequency1					Conformity Range		Possible Range	
ID				Default	Min	Max	Min	Max
.059	f<1 OFF	f_{THR} OFF	Hz	47.00	47.00	47.00	40.00	50.00
.060	f<1 ON	f_{THR} ON	Hz	47.10	47.10	50.00	40.00	50.00
.061	f<1 T	Time OFF	ms	200	200	200	200	60000

Random overfrequency					Conformity Range		Possible Range	
ID				Default	Min	Max	Min	Max
.086	f>RND	Enable function		off	on / off		on /off	

.087	f>RND OFF	f_{THR} OFF	Hz		50.50	52.00	50.50	52.00
.088	f>RND ON	f_{THR} ON	Hz	50.10	50.00	50.49	50.00	50.49
.089	f>RND T	Time OFF	ms	4000	4000	4000	50	60000
Comment:		The random f_{THR} OFF threshold is shown in .087 and cannot be edited						

Frequency measuring in general					Conformity Range		Possible Range	
ID				Default	Min	Max	Min	Max
.113	F wnd	Window length	ms	Fixed window length 100ms				

Rate of Change of Frequency (RoCoF)					Conformity Range		Possible Range	
ID				Default	Min	Max	Min	Max
.090	RoCoF	Enable Function		off	on / off		on / off	
.091	RoCoF OFF	RoCoF$_{THR}$ OFF	mHz/s	1000	10	9990	10	9990
.092	RoCoF ON	RoCoF$_{THR}$ ON	mHz/s	950	10	9990	100	9990
.093	RoCoFDelay	Time OFF	ms	500	50	60000	50	60000
.111	RoCoF wnd	Window length	ms	Fixed window length 225ms				

Phase Shift (PShift)					Conformity Range		Possible Range	
ID				Default	Min	Max	Min	Max
.094	PShift	Enable Function		off	on / off		on / off	
.095	PShift OFF	PShift $_{THR}$ OFF	°	7	2	20	2	20
.096	PShift ON	PShift $_{THR}$ ON	°	5	2	20	2	20
.097	PShift T	Time OFF	ms	0	0	60000	0	60000
.112	PShift wnd	Window length	ms	Fixed window length 200ms				

Auxiliary Contact type				Conformity Range		Possible Range	
ID			Default	Min	Max	Min	Max
.099	Contact	Type	n.c. (normally closed)	n.o. (normally opened) n.c. (normally closed)		n.o. (normally opened) n.c. (normally closed) dis. (disabled)	

.100	T Contact	Time OFF	ms	Fixed to 500ms	
.114	I3 STOP	Type	n.o. (normally opened)	n.o. (normally opened) n.c. (normally closed) dis. (disabled)	n.o. (normally opened) n.c. (normally closed) dis. (disabled)

Turn-on delay					Conformity Range		Possible Range	
ID				Default	Min	Max	Min	Max
.102	Ton delay	Turn on time	s	60	60	600	0	900

Random Turn-on delay					Conformity Range		Possible Range	
ID				Default	Min	Max	Min	Max
.103	Ton random	Enable function		off	on / off		on / off	
.104	Ton random	Turn on time	s		60	600	60	600
Comment:		The random time value is shown in .104 and cannot be edited						

Password					
ID			Default	Min	Max
.106	PW1	1st digit of Password	0	0	9
.107	PW2	2nd digit of Password	0	0	9
.108	PW3	3rd digit of Password	0	0	9
.109	PW4	4th digit of Password	0	0	9
Remark:		If all 4 digits of the Password are 0 (default setting) the Password request is skipped			

Errorlogic signalled (shown) on output relay R3. On = it is possible to detect this error Off = it is not possible to show this error on relay R3	
Overvoltage LL (UΔ)	on
Undervoltage LL (UΔ)	on
Overvoltage LN (UY)	on
Undervoltage LN (UY)	on

10-min overvoltage (Ū)	on
Overfrequency (f)	on
Underfrequency (f)	on
RoCoF (Rate of Change of Frequency) (Δf)	on
Phase shift (ΔΦ)	on
Remote shutdown / self-test (R)	off
Contactor feedback contact reports closed, although it should be open (C)	on
Contactor feedback contact reports open, although it should be closed (no error, only info) (c)	on

Device Information		
ID		
.105	ID: xxxxxxxxxx SW: aa.dd.ccb	xxxxxxxxxx = Device ID dd: Software version of Display Software aa: Software version of Measuring Software cc: Index of Configuration set b: Version of Configuration set

10.59 OPEN SETUP [ID 9006]

Connection Mode			Conformity Range	Possible Range
ID		Default		
.003	Connection	4-wire (LN)	2-wire, 3-wire, 4-wire (LN), 4-wire (LN+LL)	2-wire, 3-wire, 4-wire (LN), 4-wire (LN+LL)

Nominal Voltage					Conformity Range		Possible Range	
ID				Default	Min	Max	Min	Max
.005	ULN/LL nom	Unom Y Unom Δ	V V	230.0 400.0	28.8 50.0	250.0 434.8	28.8 50.0	250.0 434.8

Functional Safety			Conformity Range	Possible Range
ID		Default		
.007	Errtol	2ch	2ch, 1ch	2ch, 1ch
Remark:		2ch means: 2 channel with functional safety and 2 auxilliary contacts necessary 1ch means: 1 channel without functional safety and 1 auxilliary contact1 necessary		

Overvoltage1 Line to Line					Conformity Range		Possible Range	
ID				Default	Min	Max	Min	Max
.010	ULL>1	Enable function		on	on / off		on /off	
.011	ULL>1 OFF	U_{THR} OFF	%Unom	110	0	180	0	180
.012	ULL>1 ON	U_{THR} ON	%Unom	109	0	180	0	180
.013	ULL>1 T	Time OFF	ms	200	50	300000	50	300000
Only active for:		Connection Modes: 3-wire, 4-wire (LN+LL)						

Undervoltage1 Line to Line					Conformity Range		Possible Range	
ID				Default	Min	Max	Min	Max
.014	ULL<1	Enable function		on	on / off		on /off	
.015	ULL<1 OFF	U_{THR} OFF	%Unom	90	0	180	0	180
.016	ULL<1 ON	U_{THR} ON	%Unom	91	0	180	0	180
.017	ULL<1 T	Time OFF	ms	200	50	300000	50	300000

Only active for:	Connection Modes: 3-wire, 4-wire (LN+LL)

Overvoltage1 Line to Neutral					Conformity Range		Possible Range	
ID				Default	Min	Max	Min	Max
.018	ULN>1	Enable function		on	on / off		on /off	
.019	ULN>1 OFF	U_{THR} OFF	%Unom	110	0	180	0	180
.020	ULN>1 ON	U_{THR} ON	%Unom	109	0	180	0	180
.021	ULN>1 T	Time OFF	ms	200	50	300000	50	300000
Only active for:		Connection Modes: 2-wire, 4-wire (LN), 4-wire (LN+LL)						

Undervoltage1 Line to Neutral					Conformity Range		Possible Range	
ID				Default	Min	Max	Min	Max
.022	ULN<1	Enable function		on	on / off		on /off	
.023	ULN<1 OFF	U_{THR} OFF	%Unom	90	0	180	0	180
.024	ULN<1 ON	U_{THR} ON	%Unom	91	0	180	0	180
.025	ULN<1 T	Time OFF	ms	200	50	300000	50	300000
Only active for:		Connection Modes: 2-wire, 4-wire (LN), 4-wire (LN+LL))						

Overvoltage2 Line to Line					Conformity Range		Possible Range	
ID				Default	Min	Max	Min	Max
.026	ULL>2	Enable function		on	on / off		on /off	
.027	ULL>2 OFF	U_{THR} OFF	%Unom	120	0	180	0	180
.028	ULL>2 ON	U_{THR} ON	%Unom	119	0	180	0	180
.029	ULL>2 T	Time OFF	ms	100	50	300000	50	300000
Only active for:		Connection Modes: 3-wire, 4-wire (LN+LL)						

Undervoltage2 Line to Line					Conformity Range		Possible Range	
ID				Default	Min	Max	Min	Max
.030	ULL<2	Enable function		on	on / off		on /off	
.031	ULL<2 OFF	U_{THR} OFF	%Unom	80	0	180	0	180
.032	ULL<2 ON	U_{THR} ON	%Unom	81	0	180	0	180

.033	ULL<2 T	Time OFF	ms	100	50	300000	50	300000
Only active for:		Connection Modes: 3-wire, 4-wire (LN+LL)						

Overvoltage2 Line to Neutral					Conformity Range		Possible Range	
ID				Default	Min	Max	Min	Max
.034	ULN>2	Enable function		on	on / off		on /off	
.035	ULN>2 OFF	U_{THR} OFF	%Unom	120	0	180	0	180
.036	ULN>2 ON	U_{THR} ON	%Unom	119	0	180	0	180
.037	ULN>2 T	Time OFF	ms	100	50	300000	50	300000
Only active for:		Connection Modes: 2-wire, 4-wire (LN), 4-wire (LN+LL)						

Undervoltage2 Line to Neutral					Conformity Range		Possible Range	
ID				Default	Min	Max	Min	Max
.038	ULN<2	Enable function		on	on / off		on /off	
.039	ULN<2 OFF	U_{THR} OFF	%Unom	80	0	180	0	180
.040	ULN<2 ON	U_{THR} ON	%Unom	81	0	180	0	180
.041	ULN<2 T	Time OFF	ms	100	50	300000	50	300000
Only active for:		Connection Modes: 2-wire, 4-wire (LN), 4-wire (LN+LL)						

10 minutes average overvoltage					Conformity Range		Possible Range	
ID				Default	Min	Max	Min	Max
.042	UAVG>	Enable function		on	on / off		on /off	
.043	UAVG> OFF	U_{THR} OFF	%Unom	110	0	180	0	180
.044	UAVG> ON	U_{THR} ON	%Unom	109	0	180	0	180
.045	UAVG> T	Time OFF	ms	0	0	300000	0	300000

Deactivation frequency monitoring LL					Conformity Range		Possible Range	
ID				Default	Min	Max	Min	Max
.046	fdeac ULL<	Enable function		off	on / off		on /off	
.047	ULL< OFF	U_{THR} OFF	%Unom	9.5	9.5	60	2	100
		U_{THR} ON	%Unom	Fixed Hysteresis (1% U_{NOM})				

Deactivation frequency monitoring LN					Conformity Range		Possible Range	
ID				Default	Min	Max	Min	Max
.050	fdeac ULN<	Enable function		off	on / off		on /off	
.051	ULN< OFF	UTHR OFF	%Unom	9.5	9.5	60	2	100
		UTHR ON	%Unom	Fixed Hysteresis (1% UNOM)				

Overfrequency1					Conformity Range		Possible Range	
ID				Default	Min	Max	Min	Max
.054	f>1	Enable function		on	on / off		on /off	
.055	f>1 OFF	fTHR OFF	Hz	51.00	40.00	65.00	40.00	65.00
.056	f>1 ON	fTHR ON	Hz	50.90	40.00	65.00	40.00	65.00
.057	f>1 T	Time OFF	ms	200	75	300000	75	300000

Underfrequency1					Conformity Range		Possible Range	
ID				Default	Min	Max	Min	Max
.058	f<1	Enable function		on	on / off		on /off	
.059	f<1 OFF	fTHR OFF	Hz	49.00	40.00	65.00	40.00	65.00
.060	f<1 ON	fTHR ON	Hz	49.10	40.00	65.00	40.00	65.00
.061	f<1 T	Time OFF	ms	200	75	300000	75	300000

Overfrequency2					Conformity Range		Possible Range	
ID				Default	Min	Max	Min	Max
.062	f>2	Enable function		on	on / off		on /off	
.063	f>2 OFF	fTHR OFF	Hz	52.00	40.00	65.00	40.00	65.00
.064	f>2 ON	fTHR ON	Hz	51.90	40.00	65.00	40.00	65.00
.065	f>1 T	Time OFF	ms	100	75	300000	75	300000

Underfrequency2					Conformity Range		Possible Range	
ID				Default	Min	Max	Min	Max
.066	f<2	Enable function		on	on / off		on /off	

.067	f<2 OFF	f_{THR} OFF	Hz	48.00	40.00	65.00	40.00	65.00
.068	f<2 ON	f_{THR} ON	Hz	48.10	40.00	65.00	40.00	65.00
.069	f<2 T	Time OFF	ms	100	75	300000	75	300000

Random overfrequency					Conformity Range		Possible Range	
ID				Default	Min	Max	Min	Max
.086	f>RND	Enable function		off	on / off		on /off	
.087	f>RND OFF	f_{THR} OFF	Hz		50.20	51.50	50.20	51.50
.088	f>RND ON	f_{THR} ON	Hz	50.05	50.00	50.19	50.00	50.19
.089	f>RND T	Time OFF	ms	100	50	300000	50	300000
Comment:		The random f_{THR} OFF threshold is shown in .087 and cannot be edited						

Frequency measuring in general					Conformity Range		Possible Range	
ID				Default	Min	Max	Min	Max
.113	F wnd	Window length	ms	100	100	1000	100	1000

Rate of Change of Frequency (RoCoF)					Conformity Range		Possible Range	
ID				Default	Min	Max	Min	Max
.090	RoCoF	Enable Function		off	on / off		on / off	
.091	RoCoF OFF	$RoCoF_{THR}$ OFF	mHz/s	1000	10	9990	10	9990
.092	RoCoF ON	$RoCoF_{THR}$ ON	mHz/s	950	10	9990	10	9990
.093	RoCoFDelay	Time OFF	ms	500	50	300000	50	300000
.111	RoCoF wnd	Window length	ms	225	100	1000	100	1000

Phase Shift (PShift)					Conformity Range		Possible Range	
ID				Default	Min	Max	Min	Max
.094	PShift	Enable Function		off	on / off		on / off	
.095	PShift OFF	$PShift_{THR}$ OFF	°	7	2	20	2	20
.096	PShift ON	$PShift_{THR}$ ON	°	5	2	20	2	20
.097	PShift T	Time OFF	ms	0	0	300000	0	300000
.112	PShift wnd	Window length	ms	200	50	500	50	1000

Auxiliary Contact type				Conformity Range		Possible Range	
ID			Default	Min	Max	Min	Max
.099	Contact	Type	n.c. (normally closed)	n.o. (normally opened) n.c. (normally closed) dis. (disabled)		n.o. (normally opened) n.c. (normally closed) dis. (disabled)	
.100	T Contact	Time OFF	ms	Fixed to 500ms			
.114	I3 STOP	Type	n.o. (normally opened)	n.o. (normally opened) n.c. (normally closed) dis. (disabled)		n.o. (normally opened) n.c. (normally closed) dis. (disabled)	

Turn-on delay					Conformity Range		Possible Range	
ID				Default	Min	Max	Min	Max
.102	Ton delay	Turn on time	s	60	0	600	0	900

Random Turn-on delay					Conformity Range		Possible Range	
ID				Default	Min	Max	Min	Max
.103	Ton random	Enable function		off	on / off		on / off	
.104	Ton random	Turn on time	s		60	600	60	600
Comment:		The random time value is shown in .104 and cannot be edited						

Password					
ID			Default	Min	Max
.106	PW1	1st digit of Password	0	0	9
.107	PW2	2nd digit of Password	0	0	9
.108	PW3	3rd digit of Password	0	0	9
.109	PW4	4th digit of Password	0	0	9
Remark:		If all 4 digits of the Password are 0 (default setting) the Password request is skipped			

Errorlogic signalled (shown) on output relay R3. On = it is possible to detect this error Off = it is not possible to show this error on relay R3	
Overvoltage LL (UΔ)	On/off
Undervoltage LL (UΔ)	On/off
Overvoltage LN (UY)	On/off
Undervoltage LN (UY)	On/off
10-min overvoltage (Ū)	On/off
Overfrequency (f)	On/off
Underfrequency (f)	On/off
RoCoF (Rate of Change of Frequency) (Δf)	On/off
Phase shift (ΔΦ)	On/off
Remote shutdown / self-test (R)	On/off
Contactor feedback contact reports closed, although it should be open (C)	On/off
Contactor feedback contact reports open, although it should be closed (no error, only info) (c)	On/off

Device Information		
ID		
.105	ID: xxxxxxxxxx SW: aa.dd.ccb	xxxxxxxxxx = Device ID dd: Software version of Display Software aa: Software version of Measuring Software cc: Index of Configuration set b: Version of Configuration set

10.60 CZ-2024 [ID: 930]

Connection Mode			Conformity Range	Possible Range
ID		Default		
.003	Connection	4-wire LL+LN	2-wire LN, 3-wire, 4-wire LN, 4-wire LL+LN	2-wire LN, 3-wire, 4-wire LN, 4-wire LL+LN

Nominal Voltage				Conformity Range		Possible Range	
ID			Default	Min	Max	Min	Max
.005	ULN/LL nom	Unom Y Unom Δ	230,00V/ 400,00V	57,50V/ 100,00V	230,00V/ 400,00V	28,75V/ 50,00V	230,00V/ 400,00V

Functional Safety			Conformity Range	Possible Range
ID		Default		
.007	Errtol	1ch	2ch, 1ch	2ch, 1ch
Remark:		2ch means: 2 channel with functional safety and 2 auxilliary contacts necessary 1ch means: 1 channel without functional safety and 1 auxilliary contact1 necessary		

Overvoltage1 Line to Line					Conformity Range		Possible Range	
ID				Default	Min	Max	Min	Max
.010	ULL >	Enable function		off	on / off		on / off	
.011	ULL > off	UTHR OFF	%Unom /VUnom	115,00% (460,00V)	100,00 % (400,00 V)	120,00% (480,00V)	100,00% (400,00V)	135,00% (540,00V)
.012	ULL > on	UTHR ON	%Unom /VUnom	110,00% (440,00V)	100,00 % (400,00 V)	120,00% (480,00V)	100,00% (400,00V)	135,00% (540,00V)
.013	T ULL >	Time OFF		5000 ms	100 ms	100000 ms	100 ms	300000 ms
Only active for:		Connection Modes: 3-wire, 4-wire (LN+LL)						

Undervoltage1 Line to Line		Conformity Range		Possible Range	
ID	Default	Min	Max	Min	Max

.014	ULL <	Enable function		off	on / off		on / off	
.015	ULL < off	U_{THR} OFF	%Unom /VUnom	70,00% (280,00V)	20,00% (80,00V)	100,00% (400,00V)	10,00% (40,00V)	100,00% (400,00V)
.016	ULL < on	U_{THR} ON	%Unom /VUnom	85,00% (340,00V)	50,00% (200,00 V)	100,00% (400,00V)	10,00% (40,00V)	100,00% (400,00V)
.017	T ULL <	Time OFF		2700 ms	100 ms	100000 ms	100 ms	300000 ms
Only active for:		Connection Modes: 3-wire, 4-wire (LN+LL)						

Overvoltage1 Line to Neutral					Conformity Range		Possible Range	
ID				Default	Min	Max	Min	Max
.018	ULN >	Enable function		on	on / off		on / off	
.019	ULN > off	U_{THR} OFF	%Unom /VUnom	115,00% (264,50V)	100,00 % (230,00 V)	120,00% (276,00V)	100,00% (230,00V)	135,00% (310,50V)
.020	ULN > on	U_{THR} ON	%Unom /VUnom	110,00% (253,00V)	100,00 % (230,00 V)	120,00% (276,00V)	100,00% (230,00V)	135,00% (310,50V)
.021	T ULN >	Time OFF		5000 ms	100 ms	100000 ms	100 ms	300000 ms
Only active for:		Connection Modes: 2-wire, 4-wire (LN), 4-wire (LN+LL)						

Undervoltage1 Line to Neutral					Conformity Range		Possible Range	
ID				Default	Min	Max	Min	Max
.022	ULN <	Enable function		on	on / off		on / off	
.023	ULN < off	U_{THR} OFF	%Unom /VUnom	70,00% (161,00V)	20,00% (46,00V)	100,00% (230,00V)	10,00% (23,00V)	100,00% (230,00V)
.024	ULN < on	U_{THR} ON	%Unom /VUnom	85,00% (195,50V)	50,00% (115,00 V)	100,00% (230,00V)	10,00% (23,00V)	100,00% (230,00V)
.025	T ULN <	Time OFF		2700 ms	100 ms	100000 ms	100 ms	300000 ms
Only active for:		Connection Modes: 2-wire, 4-wire (LN), 4-wire (LN+LL))						

Overvoltage2 Line to Line					Conformity Range		Possible Range	
ID				Default	Min	Max	Min	Max
.026	ULL >>	Enable function		off	on / off		on / off	
.027	ULL >> off	UTHR OFF	%Unom /VUnom	120,00% (480,00V)	100,00% (400,00V)	120,00% (480,00V)	100,00% (400,00V)	135,00% (540,00V)
.028	ULL >> on	UTHR ON	%Unom /VUnom	110,00% (440,00V)	100,00% (400,00V)	120,00% (480,00V)	100,00% (400,00V)	135,00% (540,00V)
.029	T ULL >>	Time OFF		100 ms	100 ms	5000 ms	100 ms	300000 ms
Only active for:		Connection Modes: 3-wire, 4-wire (LN+LL)						

Undervoltage2 Line to Line					Conformity Range		Possible Range	
ID				Default	Min	Max	Min	Max
.030	ULL <<	Enable function		off	on / off		on / off	
.031	ULL << off	UTHR OFF	%Unom /VUnom	45,00% (180,00V)	20,00% (80,00V)	100,00% (400,00V)	10,00% (40,00V)	100,00% (400,00V)
.032	ULL << on	UTHR ON	%Unom /VUnom	85,00% (340,00V)	50,00% (200,00V)	100,00% (400,00V)	10,00% (40,00V)	100,00% (400,00V)
.033	T ULL <<	Time OFF		200 ms	100 ms	5000 ms	100 ms	300000 ms
Only active for:		Connection Modes: 3-wire, 4-wire (LN+LL)						

Overvoltage2 Line to Neutral					Conformity Range		Possible Range	
ID				Default	Min	Max	Min	Max
.034	ULN >>	Enable function		on	on / off		on / off	
.035	ULN >> off	UTHR OFF	%Unom /VUnom	120,00% (276,00V)	100,00% (230,00V)	130,00% (299,00V)	100,00% (230,00V)	135,00% (310,50V)
.036	ULN >> on	UTHR ON	%Unom /VUnom	110,00% (253,00V)	100,00% (230,00V)	120,00% (276,00V)	100,00% (230,00V)	135,00% (310,50V)
.037	T ULN >>	Time OFF		100 ms	100 ms	5000 ms	100 ms	300000 ms
Only active for:		Connection Modes: 2-wire, 4-wire (LN), 4-wire (LN+LL)						

Undervoltage2 Line to Neutral					Conformity Range		Possible Range	
ID				Default	Min	Max	Min	Max
.038	ULN <<	Enable function		on	on / off		on / off	
.039	ULN << off	U_{THR} OFF	%Unom /VUnom	45,00% (103,50V)	20,00% (46,00V)	100,00% (230,00V)	10,00% (23,00V)	100,00% (230,00V)
.040	ULN << on	U_{THR} ON	%Unom /VUnom	85,00% (195,50V)	50,00% (115,00V)	100,00% (230,00V)	10,00% (23,00V)	100,00% (230,00V)
.041	T ULN <<	Time OFF		200 ms	100 ms	5000 ms	100 ms	300000 ms
Only active for:		Connection Modes: 2-wire, 4-wire (LN), 4-wire (LN+LL)						

Zero Voltage Line to Neutral					Conformity Range		Possible Range	
ID				Default	Min	Max	Min	Max
.115	Uzero >	Enable Function		off	on / off		on / off	
.116	Uzero> off	U_{THR} OFF	%Unom /VUnom	20,00% (46,00V)	1,00% (2,30V)	100,00% (230,00V)	1,00% (2,30V)	100,00% (230,00V)
.117	Uzero> on	U_{THR} ON	%Unom /VUnom	15,00% (34,50V)	1,00% (2,30V)	100,00% (230,00V)	1,00% (2,30V)	100,00% (230,00V)
.118	T Uzero >	Time OFF		1500 ms	200 ms	100000 ms	0 ms	300000 ms
Only active for:		Connection Modes: 4-wire (LN+LL)						

Residual Voltage (3 x Zero Voltage) Line to Neutral Activation of a narrower frequency window					Conformity Range		Possible Range	
ID				Default	Min	Max	Min	Max
.119	Ures-anfw>	Enable Function		off	on / off		on / off	
.120	U res > on	U_{THR} OFF	%Unom /VUnom	5,00% (11,50V)	2,00% (4,60V)	20,00% (46,00V)	2,00% (4,60V)	100,00% (230,00V)
.121	Ures > off	U_{THR} ON	%Unom /VUnom	3,00% (6,90V)	1,00% (2,30V)	20,00% (46,00V)	1,00% (2,30V)	100,00% (230,00V)
.122	T Ures >	Time OFF		200 ms	0 ms	240000 ms	0 ms	240000 ms
Only active for:		Connection Modes: 4-wire (LN+LL)						

Undervoltage LN Activation of a narrower frequency winw					Conformity Range		Possible Range	
ID				Default	Min	Max	Min	Max
.123	Uanfw <	Enable Function		off	on / off		on / off	
.124	Uanfw< on	U_{THR} OFF	%Unom /VUnom	85,00% (195,50V)	20,00% (46,00V)	100,00% (230,00V)	1,00% (2,30V)	100,00% (230,00V)
.125	Uanfw< off	U_{THR} ON	%Unom /VUnom	86,00% (197,80V)	21,00% (48,30V)	100,00% (230,00V)	2,00% (4,60V)	100,00% (230,00V)
.126	T Uanfw <	Time OFF		0 ms	0 ms	240000 ms	0 ms	240000 ms
Only active for:		Connection Modes: 4-wire (LN+LL)						

10 minutes average overvoltage					Conformity Range		Possible Range	
ID				Default	Min	Max	Min	Max
.042	Uavg	Enable function		on	on / off		on / off	
.043	Uavg off	U_{THR} OFF	%Unom /VUnom	111,00% (255,30V/444,00V)	100,00% (230,00V/400,00V)	115,00% (264,50V/460,00V)	100,00% (230,00V/400,00V)	135,00% (310,50V/540,00V)
.044	Uavg on	U_{THR} ON	%Unom /VUnom	110,00% (253,00V/440,00V)	100,00% (230,00V/400,00V)	115,00% (264,50V/460,00V)	100,00% (230,00V/400,00V)	135,00% (310,50V/540,00V)

Overfrequency1			Conformity Range		Possible Range	
ID		Default	Min	Max	Min	Max
.054	f >	Enable function	on	on / off		on / off	
.055	f > off	f_{THR} OFF	51,500 Hz	50,000 Hz	52,000 Hz	50,000 Hz	55,000 Hz
.056	f > on	f_{THR} ON	50,050 Hz	50,000 Hz	52,000 Hz	50,000 Hz	55,000 Hz
.057	T f >	Time OFF	100 ms	100 ms	100000 ms	100 ms	300000 ms

Underfrequency1				Conformity Range		Possible Range	
ID			Default	Min	Max	Min	Max

.058	f <	Enable function	on	on / off		on / off	
.059	f < off	f_{THR} OFF	47,500 Hz	47,000 Hz	50,000 Hz	45,000 Hz	50,000 Hz
.060	f < on	f_{THR} ON	47,500 Hz	47,000 Hz	50,000 Hz	45,000 Hz	50,000 Hz
.061	T f <	Time OFF	100 ms	100 ms	100000 ms	100 ms	300000 ms

Overfrequency2				Conformity Range		Possible Range	
ID			Default	Min	Max	Min	Max
.062	f nw >	Enable function	off	on / off		on / off	
.063	f nw > off	f_{THR} OFF	50,300 Hz	50,000 Hz	52,000 Hz	50,000 Hz	55,000 Hz
.064	f nw > on	f_{THR} ON	50,100 Hz	50,000 Hz	52,000 Hz	50,000 Hz	55,000 Hz
.065	T f nw >	Time OFF	500 ms	100 ms	5000 ms	100 ms	300000 ms

Underfrequency2				Conformity Range		Possible Range	
ID			Default	Min	Max	Min	Max
.066	f nw <	Enable function	off	on / off		on / off	
.067	f nw < off	f_{THR} OFF	49,700 Hz	47,000 Hz	50,000 Hz	45,000 Hz	50,000 Hz
.068	f nw < on	f_{THR} ON	49,800 Hz	47,000 Hz	50,000 Hz	45,000 Hz	50,000 Hz
.069	T f nw <	Time OFF	500 ms	100 ms	5000 ms	100 ms	300000 ms

Frequency measuring in general				Conformity Range	
ID			Default	Min	Max
.113	F wnd	Window length	100 ms	100 ms	100 ms

Rate of Change of Frequency (RoCoF)				Conformity Range		Possible Range	
ID			Default	Min	Max	Min	Max
.090	ROCOF	Enable Function	off	on / off		on / off	

.091	ROCOF off	RoCoFTHR OFF	1000 mHz/s	200 mHz/s	9990 mHz/s	100 mHz/s	9990 mHz/s
.092	ROCOF on	RoCoFTHR ON	800 mHz/s	100 mHz/s	9990 mHz/s	100 mHz/s	9990 mHz/s
.093	T ROCOF	Time OFF	0 ms	0 ms	5000 ms	0 ms	5000 ms

Phase Shift (PShift)				Conformity Range		Possible Range	
ID			Default	Min	Max	Min	Max
.094	Pshift	Enable Function	off	on / off		on / off	
.095	Pshift off	PShift THR OFF	7,0 °	2,0 °	15,0 °	2,0 °	15,0 °
.096	Pshift on	PShift THR ON	5,0 °	1,0 °	15,0 °	1,0 °	15,0 °

Auxiliary Contact type				Conformity Range		Possible Range	
ID			Default	Min	Max	Min	Max
.099	Contact	Type	dis. (disabled)	n.o. (normally opened) n.c. (normally closed) dis. (disabled)		n.o. (normally opened) n.c. (normally closed) dis. (disabled)	
.100	T Contact	Time OFF	Fixed to 500 ms				
.114	I3 STOP	Type	n.o. (normally opened)	n.o. (normally opened) n.c. (normally closed) dis. (disabled)		n.o. (normally opened) n.c. (normally closed) dis. (disabled)	

Turn-on delay				Conformity Range		Possible Range	
ID			Default	Min	Max	Min	Max
.102	T on delay	Turn on time	300 s	10 s	1200 s	0 s	1200 s

Password					
ID			Default	Min	Max
.106	PW1	1st digit of Password	0	0	9
.107	PW2	2nd digit of Password	0	0	9
.108	PW3	3rd digit of Password	0	0	9

.109	PW4	4th digit of Password	0	0	9
Remark:		If all 4 digits of the Password are 0 (default setting) the Password request is skipped			

Errorlogic signalled (shown) on output relay channel D. Status display through yellow LED R3. On = it is possible to detect this error Off = it is not possible to detect this error	
Overvoltage LL	off
Undervoltage LL	off
Overvoltage LN	on
Undervoltage LN	on
10-min overvoltage	on
Overfrequency	on
Underfrequency	on
RoCoF (Rate of Change of Frequency)	off
Phase shift	off
Remote shutdown / self-test	on
Contactor feedback contact reports closed, although it should be open	on
Contactor feedback contact reports open, although it should be closed (no error, only info)	on

Device Information		
ID		
.105	SN: xxxxxxxxxx SW: aa.dd.ccb	xxxxxxxxxx = Device Serial Number dd: Software version of Display Software aa: Software version of Measuring Software cc: Index of Configuration set b: Version of Configuration set

10.61 EN50549-1: SI Uf A/B [ID: 940]

Connection Mode			Conformity Range	Possible Range
ID		Default		
.003	Connection	4-wire LL+LN	2-wire LN, 3-wire, 4-wire LN, 4-wire LL+LN	2-wire LN, 3-wire, 4-wire LN, 4-wire LL+LN

Nominal Voltage				Conformity Range		Possible Range	
ID			Default	Min	Max	Min	Max
.005	ULN/LL nom	Unom Y Unom Δ	230,00V/ 400,00V	57,50V/ 100,00V	230,00V/ 400,00V	57,50V/ 100,00V	230,00V/ 400,00V

Functional Safety			Conformity Range	Possible Range
ID		Default		
.007	Errtol	2ch	2ch	2ch
Remark:		2ch means: 2 channel with functional safety and 2 auxilliary contacts necessary		

Overvoltage1 Line to Line					Conformity Range		Possible Range	
ID				Default	Min	Max	Min	Max
.010	ULL >	Enable function		off	on / off		on / off	
.011	ULL > off	U_{THR} OFF	%Unom /VUnom	111,00% (444,00V)	100,00% (400,00V)	120,00% (480,00V)	100,00% (400,00V)	135,00% (540,00V)
.012	ULL > on	U_{THR} ON	%Unom /VUnom	110,00% (440,00V)	100,00% (400,00V)	120,00% (480,00V)	100,00% (400,00V)	135,00% (540,00V)
.013	T ULL >	Time OFF		2000 ms	100 ms	100000 ms	100 ms	300000 ms
Only active for:		Connection Modes: 3-wire, 4-wire (LN+LL)						

Undervoltage1 Line to Line				Conformity Range		Possible Range	
ID			Default	Min	Max	Min	Max
.014	ULL <	Enable function	off	on / off		on / off	

.015	ULL < off	UTHR OFF	%Unom /VUnom	85,00% (340,00V)	20,00% (80,00V)	100,00% (400,00V)	10,00% (40,00V)	100,00% (400,00V)
.016	ULL < on	UTHR ON	%Unom /VUnom	90,00% (360,00V)	50,00% (200,00V)	100,00% (400,00V)	10,00% (40,00V)	100,00% (400,00V)
.017	T ULL <	Time OFF		2000 ms	100 ms	100000 ms	100 ms	300000 ms
Only active for:		Connection Modes: 3-wire, 4-wire (LN+LL)						

Overvoltage1 Line to Neutral					Conformity Range		Possible Range	
ID				Default	Min	Max	Min	Max
.018	ULN >	Enable function		on	on / off		on / off	
.019	ULN > off	UTHR OFF	%Unom /VUnom	111,00% (255,30V)	100,00% (230,00V)	120,00% (276,00V)	100,00% (230,00V)	135,00% (310,50V)
.020	ULN > on	UTHR ON	%Unom /VUnom	110,00% (253,00V)	100,00% (230,00V)	110,00% (253,00V)	100,00% (230,00V)	135,00% (310,50V)
.021	T ULN >	Time OFF		2000 ms	100 ms	100000 ms	100 ms	300000 ms
Only active for:		Connection Modes: 2-wire, 4-wire (LN), 4-wire (LN+LL)						

Undervoltage1 Line to Neutral					Conformity Range		Possible Range	
ID				Default	Min	Max	Min	Max
.022	ULN <	Enable function		on	on / off		on / off	
.023	ULN < off	UTHR OFF	%Unom /VUnom	85,00% (195,50V)	20,00% (46,00V)	100,00% (230,00V)	10,00% (23,00V)	100,00% (230,00V)
.024	ULN < on	UTHR ON	%Unom /VUnom	90,00% (207,00V)	50,00% (115,00V)	100,00% (230,00V)	10,00% (23,00V)	100,00% (230,00V)
.025	T ULN <	Time OFF		2000 ms	100 ms	100000 ms	100 ms	300000 ms
Only active for:		Connection Modes: 2-wire, 4-wire (LN), 4-wire (LN+LL))						

Overvoltage2 Line to Line	Conformity Range	Possible Range

ID				Default	Min	Max	Min	Max
.026	ULL >>	Enable function		off	on / off		on / off	
.027	ULL >> off	UTHR OFF	%Unom /VUnom	115,00% (460,00V)	100,00% (400,00V)	120,00% (480,00V)	100,00% (400,00V)	135,00% (540,00V)
.028	ULL >> on	UTHR ON	%Unom /VUnom	110,00% (440,00V)	100,00% (400,00V)	110,00% (440,00V)	100,00% (400,00V)	135,00% (540,00V)
.029	T ULL >>	Time OFF		200 ms	100 ms	5000 ms	100 ms	300000 ms
Only active for:		Connection Modes: 3-wire, 4-wire (LN+LL)						

Undervoltage2 Line to Line					Conformity Range		Possible Range	
ID				Default	Min	Max	Min	Max
.030	ULL <<	Enable function		off	on / off		on / off	
.031	ULL << off	UTHR OFF	%Unom /VUnom	70,00% (280,00V)	20,00% (80,00V)	100,00% (400,00V)	10,00% (40,00V)	100,00% (400,00V)
.032	ULL << on	UTHR ON	%Unom /VUnom	90,00% (360,00V)	50,00% (200,00V)	100,00% (400,00V)	10,00% (40,00V)	100,00% (400,00V)
.033	T ULL <<	Time OFF		200 ms	100 ms	5000 ms	100 ms	300000 ms
Only active for:		Connection Modes: 3-wire, 4-wire (LN+LL)						

Overvoltage2 Line to Neutral					Conformity Range		Possible Range	
ID				Default	Min	Max	Min	Max
.034	ULN >>	Enable function		on	on / off		on / off	
.035	ULN >> off	UTHR OFF	%Unom /VUnom	115,00% (264,50V)	100,00% (230,00V)	130,00% (299,00V)	100,00% (230,00V)	135,00% (310,50V)
.036	ULN >> on	UTHR ON	%Unom /VUnom	110,00% (253,00V)	100,00% (230,00V)	110,00% (253,00V)	100,00% (230,00V)	135,00% (310,50V)
.037	T ULN >>	Time OFF		200 ms	100 ms	5000 ms	100 ms	300000 ms
Only active for:		Connection Modes: 2-wire, 4-wire (LN), 4-wire (LN+LL)						

Undervoltage2 Line to Neutral					Conformity Range		Possible Range	
ID				Default	Min	Max	Min	Max
.038	ULN <<	Enable function		on	on / off		on / off	
.039	ULN << off	U_{THR} OFF	%Unom /VUnom	70,00% (161,00V)	20,00% (46,00V)	100,00% (230,00V)	10,00% (23,00V)	100,00% (230,00V)
.040	ULN << on	U_{THR} ON	%Unom /VUnom	90,00% (207,00V)	50,00% (115,00V)	100,00% (230,00V)	10,00% (23,00V)	100,00% (230,00V)
.041	T ULN <<	Time OFF		200 ms	100 ms	5000 ms	100 ms	300000 ms
Only active for:		Connection Modes: 2-wire, 4-wire (LN), 4-wire (LN+LL)						

Zero Voltage Line to Neutral					Conformity Range		Possible Range	
ID				Default	Min	Max	Min	Max
.115	Uzero >	Enable Function		off	on / off		on / off	
.116	Uzero> off	U_{THR} OFF	%Unom /VUnom	20,00% (46,00V)	1,00% (2,30V)	100,00% (230,00V)	1,00% (2,30V)	100,00% (230,00V)
.117	Uzero> on	U_{THR} ON	%Unom /VUnom	15,00% (34,50V)	1,00% (2,30V)	100,00% (230,00V)	1,00% (2,30V)	100,00% (230,00V)
.118	T Uzero >	Time OFF		1500 ms	200 ms	100000 ms	0 ms	300000 ms
Only active for:		Connection Modes: 4-wire (LN+LL)						

Residual Voltage (3 x Zero Voltage) Line to Neutral Activation of a narrower frequency window					Conformity Range		Possible Range	
ID				Default	Min	Max	Min	Max
.119	Ures-anfw>	Enable Function		off	on / off		on / off	
.120	U res > on	U_{THR} OFF	%Unom /VUnom	5,00% (11,50V)	2,00% (4,60V)	20,00% (46,00V)	2,00% (4,60V)	100,00% (230,00V)
.121	Ures > off	U_{THR} ON	%Unom /VUnom	3,00% (6,90V)	1,00% (2,30V)	20,00% (46,00V)	1,00% (2,30V)	100,00% (230,00V)
.122	T Ures >	Time OFF		200 ms	0 ms	240000 ms	0 ms	240000 ms
Only active for:		Connection Modes: 4-wire (LN+LL)						

Undervoltage LN Activation of a narrower frequency winw					Conformity Range		Possible Range	
ID				Default	Min	Max	Min	Max
.123	Uanfw <	Enable Function		off	on / off		on / off	
.124	Uanfw< on	U_{THR} OFF	%Unom /VUnom	85,00% (195,50V)	20,00% (46,00V)	100,00% (230,00V)	1,00% (2,30V)	100,00% (230,00V)
.125	Uanfw< off	U_{THR} ON	%Unom /VUnom	86,00% (197,80V)	21,00% (48,30V)	100,00% (230,00V)	2,00% (4,60V)	100,00% (230,00V)
.126	T Uanfw <	Time OFF		0 ms	0 ms	240000 ms	0 ms	240000 ms
Only active for:		Connection Modes: 4-wire (LN+LL)						

10 minutes average overvoltage					Conformity Range		Possible Range	
ID				Default	Min	Max	Min	Max
.042	Uavg	Enable function		off	on / off		on / off	
.043	Uavg off	U_{THR} OFF	%Unom /VUnom	110,00% (253,00V/ 440,00V)	100,00% (230,00V/ 400,00V)	115,00% (264,50V/ 460,00V)	100,00% (230,00V /400,00V)	135,00% (310,50V/ 540,00V)
.044	Uavg on	U_{THR} ON	%Unom /VUnom	109,00% (250,70V/ 436,00V)	100,00% (230,00V/ 400,00V)	115,00% (264,50V/ 460,00V)	100,00% (230,00V /400,00V)	135,00% (310,50V/ 540,00V)

Overfrequency1				Conformity Range		Possible Range	
ID			Default	Min	Max	Min	Max
.054	f >	Enable function	on	on / off		on / off	
.055	f > off	f_{THR} OFF	52,000 Hz	50,000 Hz	52,000 Hz	50,000 Hz	55,000 Hz
.056	f > on	f_{THR} ON	50,100 Hz	50,000 Hz	51,000 Hz	50,000 Hz	55,000 Hz
.057	T f >	Time OFF	200 ms	100 ms	60000 ms	100 ms	300000 ms

Underfrequency1			Conformity Range		Possible Range	
ID		Default	Min	Max	Min	Max

.058	f <	Enable function	on	on / off		on / off	
.059	f < off	f_{THR} OFF	47,000 Hz	47,000 Hz	50,000 Hz	45,000 Hz	50,000 Hz
.060	f < on	f_{THR} ON	49,900 Hz	47,000 Hz	50,000 Hz	45,000 Hz	50,000 Hz
.061	T f <	Time OFF	200 ms	100 ms	60000 ms	100 ms	300000 ms

Overfrequency2				Conformity Range		Possible Range	
ID			Default	Min	Max	Min	Max
.062	f nw >	Enable function	off	on / off		on / off	
.063	f nw > off	f_{THR} OFF	50,300 Hz	50,000 Hz	52,000 Hz	50,000 Hz	55,000 Hz
.064	f nw > on	f_{THR} ON	50,100 Hz	50,000 Hz	52,000 Hz	50,000 Hz	55,000 Hz
.065	T f nw >	Time OFF	500 ms	100 ms	5000 ms	100 ms	300000 ms

Underfrequency2				Conformity Range		Possible Range	
ID			Default	Min	Max	Min	Max
.066	f nw <	Enable function	off	on / off		on / off	
.067	f nw < off	f_{THR} OFF	49,700 Hz	47,000 Hz	50,000 Hz	45,000 Hz	50,000 Hz
.068	f nw < on	f_{THR} ON	49,900 Hz	47,000 Hz	50,000 Hz	45,000 Hz	50,000 Hz
.069	T f nw <	Time OFF	500 ms	100 ms	5000 ms	100 ms	300000 ms

Frequency measuring in general				Conformity Range	
ID			Default	Min	Max
.113	F wnd	Window length	100 ms	100 ms	100 ms

Rate of Change of Frequency (RoCoF)				Conformity Range		Possible Range	
ID			Default	Min	Max	Min	Max
.090	ROCOF	Enable Function	off	on / off		on / off	
.091	ROCOF off	RoCoF$_{THR}$ OFF	5000 mHz/s	200 mHz/s	9990 mHz/s	100 mHz/s	9990 mHz/s

.092	ROCOF on	RoCoF$_{THR}$ ON	4900 mHz/s	100 mHz/s	9990 mHz/s	100 mHz/s	9990 mHz/s
.093	T ROCOF	Time OFF	500 ms	0 ms	5000 ms	0 ms	5000 ms

Phase Shift (PShift)				Conformity Range		Possible Range	
ID			Default	Min	Max	Min	Max
.094	Pshift	Enable Function	off	on / off		on / off	
.095	Pshift off	PShift $_{THR}$ OFF	7,0 °	2,0 °	15,0 °	2,0 °	15,0 °
.096	Pshift on	PShift $_{THR}$ ON	5,0 °	1,0 °	15,0 °	1,0 °	15,0 °

Auxiliary Contact type				Conformity Range		Possible Range	
ID			Default	Min	Max	Min	Max
.099	Contact	Type	n.c. (normally closed)	n.o. (normally opened) n.c. (normally closed) dis. (disabled)		n.o. (normally opened) n.c. (normally closed) dis. (disabled)	
.100	T Contact	Time OFF	Fixed to 500 ms				
.114	I3 STOP	Type	n.o. (normally opened)	n.o. (normally opened) n.c. (normally closed) dis. (disabled)		n.o. (normally opened) n.c. (normally closed) dis. (disabled)	

Turn-on delay				Conformity Range		Possible Range	
ID			Default	Min	Max	Min	Max
.102	T on delay	Turn on time	60 s	10 s	600 s	0 s	900 s

Password					
ID			Default	Min	Max
.106	PW1	1st digit of Password	0	0	9
.107	PW2	2nd digit of Password	0	0	9
.108	PW3	3rd digit of Password	0	0	9
.109	PW4	4th digit of Password	0	0	9

Remark:	If all 4 digits of the Password are 0 (default setting) the Password request is skipped

Errorlogic signalled (shown) on output relay channel D. Status display through yellow LED R3. On = it is possible to detect this error Off = it is not possible to detect this error	
Overvoltage LL	on
Undervoltage LL	on
Overvoltage LN	on
Undervoltage LN	on
10-min overvoltage	on
Overfrequency	on
Underfrequency	on
RoCoF (Rate of Change of Frequency)	on
Phase shift	on
Remote shutdown / self-test	on
Contactor feedback contact reports closed, although it should be open	on
Contactor feedback contact reports open, although it should be closed (no error, only info)	on

Device Information		
ID		
.105	SN: xxxxxxxxxx SW: aa.dd.ccb	xxxxxxxxxx = Device Serial Number dd: Software version of Display Software aa: Software version of Measuring Software cc: Index of Configuration set b: Version of Configuration set

10.62 EN50549-2: SI Uf C [ID: 945]

Connection Mode			Conformity Range	Possible Range
ID		Default		
.003	Connection	4-wire LL+LN	3-wire LL, 4-wire LN, 4-wire LL+LN	2-wire LN - 4-wire LL+LN

Nominal Voltage				Conformity Range		Possible Range	
ID			Default	Min	Max	Min	Max
.005	ULN/LL nom	Unom Y Unom Δ	230,00V/ 400,00V	57,50V/ 100,00V	230,00V/ 400,00V	57,50V/ 100,00V	240,01V/ 417,40V

Functional Safety			Conformity Range	Possible Range
ID		Default		
.007	Errtol	2ch	2ch	2ch
Remark:		2ch means: 2 channel with functional safety and 2 auxilliary contacts necessary		

Overvoltage1 Line to Line					Conformity Range		Possible Range	
ID				Default	Min	Max	Min	Max
.010	ULL >	Enable function		on	on / off		on / off	
.011	ULL > off	UTHR OFF	%Unom /VUnom	111,00% (444,00V)	100,00% (400,00V)	120,00% (480,00V)	100,00% (400,00V)	135,00% (540,00V)
.012	ULL > on	UTHR ON	%Unom /VUnom	110,00% (440,00V)	100,00% (400,00V)	110,00% (440,00V)	100,00% (400,00V)	135,00% (540,00V)
.013	T ULL >	Time OFF		2000 ms	100 ms	100000 ms	100 ms	300000 ms
Only active for:		Connection Modes: 3-wire, 4-wire (LN+LL)						

Undervoltage1 Line to Line				Conformity Range		Possible Range	
ID			Default	Min	Max	Min	Max
.014	ULL <	Enable function	on	on / off		on / off	

.015	ULL < off	UTHR OFF	%Unom /VUnom	85,00% (340,00V)	20,00% (80,00V)	100,00% (400,00V)	10,00% (40,00V)	100,00% (400,00V)
.016	ULL < on	UTHR ON	%Unom /VUnom	90,00% (360,00V)	50,00% (200,00V)	100,00% (400,00V)	10,00% (40,00V)	100,00% (400,00V)
.017	T ULL <	Time OFF		2000 ms	100 ms	100000 ms	100 ms	300000 ms
Only active for:		Connection Modes: 3-wire, 4-wire (LN+LL)						

Overvoltage1 Line to Neutral					Conformity Range		Possible Range	
ID				Default	Min	Max	Min	Max
.018	ULN >	Enable function		on	on / off		on / off	
.019	ULN > off	UTHR OFF	%Unom /VUnom	111,00% (255,30V)	100,00% (230,00V)	120,00% (276,00V)	100,00% (230,00V)	135,00% (310,50V)
.020	ULN > on	UTHR ON	%Unom /VUnom	110,00% (253,00V)	100,00% (230,00V)	110,00% (253,00V)	100,00% (230,00V)	135,00% (310,50V)
.021	T ULN >	Time OFF		2000 ms	100 ms	100000 ms	100 ms	300000 ms
Only active for:		Connection Modes: 2-wire, 4-wire (LN), 4-wire (LN+LL)						

Undervoltage1 Line to Neutral					Conformity Range		Possible Range	
ID				Default	Min	Max	Min	Max
.022	ULN <	Enable function		on	on / off		on / off	
.023	ULN < off	UTHR OFF	%Unom /VUnom	85,00% (195,50V)	20,00% (46,00V)	100,00% (230,00V)	10,00% (23,00V)	100,00% (230,00V)
.024	ULN < on	UTHR ON	%Unom /VUnom	90,00% (207,00V)	50,00% (115,00V)	100,00% (230,00V)	10,00% (23,00V)	100,00% (230,00V)
.025	T ULN <	Time OFF		2000 ms	100 ms	100000 ms	100 ms	300000 ms
Only active for:		Connection Modes: 2-wire, 4-wire (LN), 4-wire (LN+LL))						

Overvoltage2 Line to Line	Conformity Range	Possible Range

ID				Default	Min	Max	Min	Max
.026	ULL >>	Enable function		on	on / off		on / off	
.027	ULL >> off	U_{THR} OFF	%Unom /VUnom	115,00% (460,00V)	100,00% (400,00V)	120,00% (480,00V)	100,00% (400,00V)	135,00% (540,00V)
.028	ULL >> on	U_{THR} ON	%Unom /VUnom	110,00% (440,00V)	100,00% (400,00V)	110,00% (440,00V)	100,00% (400,00V)	135,00% (540,00V)
.029	T ULL >>	Time OFF		200 ms	100 ms	5000 ms	100 ms	300000 ms
Only active for:		Connection Modes: 3-wire, 4-wire (LN+LL)						

Undervoltage2 Line to Line					Conformity Range		Possible Range	
ID				Default	Min	Max	Min	Max
.030	ULL <<	Enable function		on	on / off		on / off	
.031	ULL << off	U_{THR} OFF	%Unom /VUnom	70,00% (280,00V)	20,00% (80,00V)	100,00% (400,00V)	10,00% (40,00V)	100,00% (400,00V)
.032	ULL << on	U_{THR} ON	%Unom /VUnom	90,00% (360,00V)	50,00% (200,00V)	100,00% (400,00V)	10,00% (40,00V)	100,00% (400,00V)
.033	T ULL <<	Time OFF		200 ms	100 ms	5000 ms	100 ms	300000 ms
Only active for:		Connection Modes: 3-wire, 4-wire (LN+LL)						

Overvoltage2 Line to Neutral					Conformity Range		Possible Range	
ID				Default	Min	Max	Min	Max
.034	ULN >>	Enable function		on	on / off		on / off	
.035	ULN >> off	U_{THR} OFF	%Unom /VUnom	115,00% (264,50V)	100,00% (230,00V)	130,00% (299,00V)	100,00% (230,00V)	135,00% (310,50V)
.036	ULN >> on	U_{THR} ON	%Unom /VUnom	110,00% (253,00V)	100,00% (230,00V)	110,00% (253,00V)	100,00% (230,00V)	135,00% (310,50V)
.037	T ULN >>	Time OFF		200 ms	100 ms	5000 ms	100 ms	300000 ms
Only active for:		Connection Modes: 2-wire, 4-wire (LN), 4-wire (LN+LL)						

Undervoltage2 Line to Neutral					Conformity Range		Possible Range	
ID				Default	Min	Max	Min	Max
.038	ULN <<	Enable function		on	on / off		on / off	
.039	ULN << off	UTHR OFF	%Unom /VUnom	70,00% (161,00V)	20,00% (46,00V)	100,00% (230,00V)	10,00% (23,00V)	100,00% (230,00V)
.040	ULN << on	UTHR ON	%Unom /VUnom	90,00% (207,00V)	50,00% (115,00V)	100,00% (230,00V)	10,00% (23,00V)	100,00% (230,00V)
.041	T ULN <<	Time OFF		200 ms	100 ms	5000 ms	100 ms	300000 ms
Only active for:		Connection Modes: 2-wire, 4-wire (LN), 4-wire (LN+LL)						

Zero Voltage Line to Neutral					Conformity Range		Possible Range	
ID				Default	Min	Max	Min	Max
.115	Uzero >	Enable Function		off	on / off		on / off	
.116	Uzero> off	UTHR OFF	%Unom /VUnom	20,00% (46,00V)	1,00% (2,30V)	100,00% (230,00V)	1,00% (2,30V)	100,00% (230,00V)
.117	Uzero> on	UTHR ON	%Unom /VUnom	15,00% (34,50V)	1,00% (2,30V)	100,00% (230,00V)	1,00% (2,30V)	100,00% (230,00V)
.118	T Uzero >	Time OFF		1500 ms	200 ms	100000 ms	0 ms	300000 ms
Only active for:		Connection Modes: 4-wire (LN+LL)						

Residual Voltage (3 x Zero Voltage) Line to Neutral Activation of a narrower frequency window					Conformity Range		Possible Range	
ID				Default	Min	Max	Min	Max
.119	Ures-anfw>	Enable Function		off	on / off		on / off	
.120	U res > on	UTHR OFF	%Unom /VUnom	5,00% (11,50V)	2,00% (4,60V)	20,00% (46,00V)	2,00% (4,60V)	100,00% (230,00V)
.121	Ures > off	UTHR ON	%Unom /VUnom	3,00% (6,90V)	1,00% (2,30V)	20,00% (46,00V)	1,00% (2,30V)	100,00% (230,00V)
.122	T Ures >	Time OFF		200 ms	0 ms	240000 ms	0 ms	240000 ms
Only active for:		Connection Modes: 4-wire (LN+LL)						

Undervoltage LN Activation of a narrower frequency winw					Conformity Range		Possible Range	
ID				Default	Min	Max	Min	Max
.123	Uanfw <	Enable Function		off	on / off		on / off	
.124	Uanfw< on	UTHR OFF	%Unom /VUnom	85,00% (195,50V)	20,00% (46,00V)	100,00% (230,00V)	1,00% (2,30V)	100,00% (230,00V)
.125	Uanfw< off	UTHR ON	%Unom /VUnom	86,00% (197,80V)	21,00% (48,30V)	100,00% (230,00V)	2,00% (4,60V)	100,00% (230,00V)
.126	T Uanfw <	Time OFF		0 ms	0 ms	240000 ms	0 ms	240000 ms
Only active for:		Connection Modes: 4-wire (LN+LL)						

10 minutes average overvoltage					Conformity Range		Possible Range	
ID				Default	Min	Max	Min	Max
.042	Uavg	Enable function		off	on / off		on / off	
.043	Uavg off	UTHR OFF	%Unom /VUnom	111,00% (255,30V/ 444,00V)	100,00% (230,00V/ 400,00V)	115,00% (264,50V/ 460,00V)	100,00% (230,00V /400,00V)	135,00% (310,50V/ 540,00V)
.044	Uavg on	UTHR ON	%Unom /VUnom	110,00% (253,00V/ 440,00V)	100,00% (230,00V/ 400,00V)	115,00% (264,50V/ 460,00V)	100,00% (230,00V /400,00V)	135,00% (310,50V/ 540,00V)

Overfrequency1				Conformity Range		Possible Range	
ID			Default	Min	Max	Min	Max
.054	f >	Enable function	on	on / off		on / off	
.055	f > off	fTHR OFF	55,000 Hz	50,000 Hz	55,000 Hz	50,000 Hz	55,000 Hz
.056	f > on	fTHR ON	50,100 Hz	50,000 Hz	51,000 Hz	50,000 Hz	55,000 Hz
.057	T f >	Time OFF	5000 ms	100 ms	60000 ms	100 ms	300000 ms

Underfrequency1				Conformity Range		Possible Range	
ID			Default	Min	Max	Min	Max
.058	f <	Enable function	on	on / off		on / off	

.059	f < off	f_{THR} OFF	45,000 Hz	45,000 Hz	50,000 Hz	45,000 Hz	50,000 Hz
.060	f < on	f_{THR} ON	49,900 Hz	47,500 Hz	50,000 Hz	45,000 Hz	50,000 Hz
.061	T f <	Time OFF	5000 ms	100 ms	60000 ms	100 ms	300000 ms

Overfrequency2				Conformity Range		Possible Range	
ID			Default	Min	Max	Min	Max
.062	f nw >	Enable function	off	on / off		on / off	
.063	f nw > off	f_{THR} OFF	50,300 Hz	50,000 Hz	52,000 Hz	50,000 Hz	55,000 Hz
.064	f nw > on	f_{THR} ON	50,100 Hz	50,000 Hz	52,000 Hz	50,000 Hz	55,000 Hz
.065	T f nw >	Time OFF	500 ms	100 ms	5000 ms	100 ms	300000 ms

Underfrequency2				Conformity Range		Possible Range	
ID			Default	Min	Max	Min	Max
.066	f nw <	Enable function	off	on / off		on / off	
.067	f nw < off	f_{THR} OFF	49,700 Hz	47,000 Hz	50,000 Hz	45,000 Hz	50,000 Hz
.068	f nw < on	f_{THR} ON	49,900 Hz	47,000 Hz	50,000 Hz	45,000 Hz	50,000 Hz
.069	T f nw <	Time OFF	500 ms	100 ms	5000 ms	100 ms	300000 ms

Overfrequency3				Conformity Range		Possible Range	
ID			Default	Min	Max	Min	Max
.070	f >>	Enable function	on	on / off		on / off	
.071	f >> off	f_{THR} OFF	60,000 Hz	50,000 Hz	60,000 Hz	50,000 Hz	60,000 Hz
.072	f >> on	f_{THR} ON	50,100 Hz	50,000 Hz	51,000 Hz	50,000 Hz	55,000 Hz
.073	T f >>	Time OFF	200 ms	100 ms	100000 ms	100 ms	300000 ms

Underfrequency3				Conformity Range		Possible Range	

ID			Default	Min	Max	Min	Max
.074	f <<	Enable function	on	on / off		on / off	
.075	f << off	f_{THR} OFF	40,000 Hz	40,000 Hz	50,000 Hz	40,000 Hz	50,000 Hz
.076	f << on	f_{THR} ON	49,900 Hz	47,500 Hz	50,000 Hz	45,000 Hz	50,000 Hz
.077	T f <<	Time OFF	200 ms	100 ms	100000 ms	100 ms	300000 ms

Frequency measuring in general				Conformity Range	
.113	F wnd	Window length	100 ms	100 ms	100 ms

Rate of Change of Frequency (RoCoF)				Conformity Range		Possible Range	
ID			Default	Min	Max	Min	Max
.090	ROCOF	Enable Function	off	on / off		on / off	
.091	ROCOF off	RoCoF$_{THR}$ OFF	5000 mHz/s	200 mHz/s	9990 mHz/s	100 mHz/s	9990 mHz/s
.092	ROCOF on	RoCoF$_{THR}$ ON	4900 mHz/s	100 mHz/s	9990 mHz/s	100 mHz/s	9990 mHz/s
.093	T ROCOF	Time OFF	500 ms	0 ms	5000 ms	0 ms	5000 ms

Phase Shift (PShift)				Conformity Range		Possible Range	
ID			Default	Min	Max	Min	Max
.094	Pshift	Enable Function	off	on / off		on / off	
.095	Pshift off	PShift $_{THR}$ OFF	7,0 °	2,0 °	15,0 °	2,0 °	15,0 °
.096	Pshift on	PShift $_{THR}$ ON	5,0 °	1,0 °	15,0 °	1,0 °	15,0 °

Auxiliary Contact type				Conformity Range		Possible Range	
ID			Default	Min	Max	Min	Max
.099	Contact	Type	n.c. (normally closed)	n.o. (normally opened) n.c. (normally closed) dis. (disabled)		n.o. (normally opened) n.c. (normally closed) dis. (disabled)	

.100	T Contact	Time OFF	Fixed to 500 ms		
.114	I3 STOP	Type	n.o. (normally opened)	n.o. (normally opened) n.c. (normally closed) dis. (disabled)	n.o. (normally opened) n.c. (normally closed) dis. (disabled)

Turn-on delay				Conformity Range		Possible Range	
ID			Default	Min	Max	Min	Max
.102	T on delay	Turn on time	60 s	10 s	600 s	0 s	900 s

Password					
ID			Default	Min	Max
.106	PW1	1st digit of Password	0	0	9
.107	PW2	2nd digit of Password	0	0	9
.108	PW3	3rd digit of Password	0	0	9
.109	PW4	4th digit of Password	0	0	9
Remark:		If all 4 digits of the Password are 0 (default setting) the Password request is skipped			

Errorlogic signalled (shown) on output relay channel D. Status display through yellow LED R3. On = it is possible to detect this error Off = it is not possible to detect this error	
Overvoltage LL	on
Undervoltage LL	on
Overvoltage LN	on
Undervoltage LN	on
10-min overvoltage	on
Overfrequency	on
Underfrequency	on
RoCoF (Rate of Change of Frequency)	on
Phase shift	on
Remote shutdown / self-test	on

Contactor feedback contact reports closed, although it should be open	on
Contactor feedback contact reports open, although it should be closed (no error, only info)	on

Device Information		
ID		
.105	SN: xxxxxxxxxx	xxxxxxxxxx = Device Serial Number
	SW: aa.dd.ccb	dd: Software version of Display Software
		aa: Software version of Measuring Software
		cc: Index of Configuration set
		b: Version of Configuration set

10.63 Bulgaria LV 2024 [ID: 1400]

Connection Mode			Conformity Range	Possible Range
ID		Default		
.003	Connection	4-wire LN	4-wire LN	2-wire LN - 4-wire LL+LN

Nominal Voltage				Conformity Range		Possible Range	
ID			Default	Min	Max	Min	Max
.005	ULN/LL nom	Unom Y Unom Δ	230,00V/ 400,00V	57,50V/ 100,00V	230,00V/ 400,00V	28,75V/ 50,00V	250,01V/ 434,80V

Functional Safety			Conformity Range	Possible Range
ID		Default		
.007	Errtol	2ch	2ch, 1ch	2ch, 1ch
Remark:		2ch means: 2 channel with functional safety and 2 auxilliary contacts necessary 1ch means: 1 channel without functional safety and 1 auxilliary contact1 necessary		

Overvoltage1 Line to Neutral					Conformity Range		Possible Range	
ID				Default	Min	Max	Min	Max
.018	Ueff >	Enable function		on	on		on / off	
.019	Ueff > off	UTHR OFF	%Unom /VUnom	111,00% (255,30V)	100,00 % (230,00 V)	130,00% (299,00V)	100,00% (230,00V)	135,00% (310,50V)
.020	Ueff > on	UTHR ON	%Unom /VUnom	110,00% (253,00V)	100,00 % (230,00 V)	110,00% (253,00V)	100,00% (230,00V)	135,00% (310,50V)
.021	T Ueff >	Time OFF		60000 ms	50 ms	180000 ms	50 ms	300000 ms
Only active for:		Connection Modes: 2-wire, 4-wire (LN), 4-wire (LN+LL)						

Undervoltage1 Line to Neutral			Conformity Range		Possible Range	
ID		Default	Min	Max	Min	Max

.022	Ueff <	Enable function		on	on		on / off	
.023	Ueff < off	UTHR OFF	%Unom /VUnom	80,00% (184,00V)	10,00% (23,00V)	100,00% (230,00V)	10,00% (23,00V)	100,00% (230,00V)
.024	Ueff < on	UTHR ON	%Unom /VUnom	84,00% (193,20V)	10,00% (23,00V)	100,00% (230,00V)	10,00% (23,00V)	100,00% (230,00V)
.025	T Ueff <	Time OFF		1500 ms	50 ms	180000 ms	50 ms	300000 ms
Only active for:		Connection Modes: 2-wire, 4-wire (LN), 4-wire (LN+LL))						

Overvoltage2 Line to Neutral					Conformity Range		Possible Range	
ID				Default	Min	Max	Min	Max
.034	Ueff>>	Enable function		on	on		on / off	
.035	Ueff>> off	UTHR OFF	%Unom /VUnom	115,00% (264,50V)	100,00% (230,00V)	130,00% (299,00V)	100,00% (230,00V)	135,00% (310,50V)
.036	Ueff>> on	UTHR ON	%Unom /VUnom	110,00% (253,00V)	100,00% (230,00V)	110,00% (253,00V)	100,00% (230,00V)	135,00% (310,50V)
.037	T Ueff>>	Time OFF		100 ms	50 ms	180000 ms	50 ms	300000 ms
Only active for:		Connection Modes: 2-wire, 4-wire (LN), 4-wire (LN+LL)						

Deactivation frequency monitoring LN					Conformity Range		Possible Range	
ID				Default	Min	Max	Min	Max
.051	f deact U<	UTHR OFF	%Unom	60,00% (138,00V)	9,50% (21,85V)	60,00% (138,00V)	2,00% (4,60V)	100,00% (230,00V)
		UTHR ON	%Unom	Fixed Hysteresis (0,50% (1,150V) UNOM)				

Overfrequency1				Conformity Range		Possible Range	
ID			Default	Min	Max	Min	Max
.055	f > off	f_{THR} OFF	50,300 Hz	50,000 Hz	55,000 Hz	50,000 Hz	55,000 Hz
.056	f > on	f_{THR} ON	50,200 Hz	50,000 Hz	50,200 Hz	50,000 Hz	55,000 Hz
.057	T f >	Time OFF	2000 ms	50 ms	2000 ms	50 ms	300000 ms

Underfrequency1				Conformity Range		Possible Range	
ID			Default	Min	Max	Min	Max
.059	f < off	f_{THR} OFF	47,500 Hz	45,000 Hz	50,000 Hz	45,000 Hz	50,000 Hz
.060	f < on	f_{THR} ON	47,600 Hz	47,550 Hz	50,000 Hz	45,000 Hz	50,000 Hz
.061	T f <	Time OFF	50 ms	50 ms	50 ms	50 ms	300000 ms

Overfrequency2				Conformity Range		Possible Range	
ID			Default	Min	Max	Min	Max
.063	f >> off	f_{THR} OFF	51,500 Hz	50,000 Hz	55,000 Hz	50,000 Hz	55,000 Hz
.064	f >> on	f_{THR} ON	51,400 Hz	50,000 Hz	51,400 Hz	50,000 Hz	55,000 Hz
.065	T f >>	Time OFF	50 ms	50 ms	50 ms	50 ms	300000 ms

Frequency measuring in general				Conformity Range	
ID			Default	Min	Max
.113	F wnd	Window length	100 ms	100 ms	100 ms

Auxiliary Contact type				Conformity Range		Possible Range	
ID			Default	Min	Max	Min	Max
.099	Contact	Type	n.c (normally closed)	n.o. (normally opened) n.c. (normally closed)		n.o. (normally opened) n.c. (normally closed) dis. (disabled)	

.100	T Contact	Time OFF	Fixed to 500 ms		
.114	I3 STOP	Type	n.o. (normally opened)	n.o. (normally opened) n.c. (normally closed)	n.o. (normally opened) n.c. (normally closed) dis. (disabled)

Turn-on delay				Conformity Range		Possible Range	
ID			Default	Min	Max	Min	Max
.102	T on delay	Turn on time	600 s	0 s	600 s	0 s	900 s

Password					
ID			Default	Min	Max
.106	PW1	1st digit of Password	0	0	9
.107	PW2	2nd digit of Password	0	0	9
.108	PW3	3rd digit of Password	0	0	9
.109	PW4	4th digit of Password	0	0	9
Remark:		If all 4 digits of the Password are 0 (default setting) the Password request is skipped			

Errorlogic signalled (shown) on output relay channel D. Status display through yellow LED R3. On = it is possible to detect this error Off = it is not possible to detect this error	
Overvoltage LL	on
Undervoltage LL	on
Overvoltage LN	on
Undervoltage LN	on
10-min overvoltage	on
Overfrequency	on
Underfrequency	on
RoCoF (Rate of Change of Frequency)	on
Phase shift	on
Remote shutdown / self-test	on

Contactor feedback contact reports closed, although it should be open	on
Contactor feedback contact reports open, although it should be closed (no error, only info)	on

Device Information		
ID		
.105	SN: xxxxxxxxxx	xxxxxxxxxx = Device Serial Number
	SW: aa.dd.ccb	dd: Software version of Display Software aa: Software version of Measuring Software cc: Index of Configuration set b: Version of Configuration set

10.64 Bulgaria MV 2024 [ID: 1450]

Connection Mode			Conformity Range	Possible Range
ID		Default		
.003	Connection	3-wire LL	3-wire LL	2-wire LN - 4-wire LL+LN

Nominal Voltage				Conformity Range		Possible Range	
ID			Default	Min	Max	Min	Max
.005	ULN/LL nom	Unom Y Unom Δ	57,50V/ 100,00V	51,75V/ 90,00V	230,00V/ 400,00V	28,75V/ 50,00V	250,01V/ 434,80V

Functional Safety			Conformity Range	Possible Range
ID		Default		
.007	Errtol	2ch	2ch, 1ch	2ch, 1ch
Remark:		2ch means: 2 channel with functional safety and 2 auxilliary contacts necessary 1ch means: 1 channel without functional safety and 1 auxilliary contact1 necessary		

Overvoltage1 Line to Line					Conformity Range		Possible Range	
ID				Default	Min	Max	Min	Max
.011	ULL > off	U_{THR} OFF	%Unom /VUnom	111,00% (111,00V)	100,00% (100,00V)	130,00% (130,00V)	100,00% (100,00V)	135,00% (135,00V)
.012	ULL > on	U_{THR} ON	%Unom /VUnom	110,00% (110,00V)	100,00% (100,00V)	110,00% (110,00V)	100,00% (100,00V)	135,00% (135,00V)
.013	T ULL >	Time OFF		60000 ms	50 ms	180000 ms	50 ms	300000 ms
Only active for:		Connection Modes: 3-wire, 4-wire (LN+LL)						

Undervoltage1 Line to Line			Conformity Range		Possible Range	
ID		Default	Min	Max	Min	Max

.015	ULL < off	UTHR OFF	%Unom /VUnom	80,00% (80,00V)	10,00% (10,00V)	100,00% (100,00V)	10,00% (10,00V)	100,00% (100,00V)
.016	ULL < on	UTHR ON	%Unom /VUnom	84,00% (84,00V)	10,00% (10,00V)	100,00% (100,00V)	10,00% (10,00V)	100,00% (100,00V)
.017	T ULL <	Time OFF		1500 ms	50 ms	180000 ms	50 ms	300000 ms
Only active for:		Connection Modes: 3-wire, 4-wire (LN+LL)						

Overvoltage1 Line to Neutral					Conformity Range		Possible Range	
ID				Default	Min	Max	Min	Max
.018	ULN >	Enable function		off	off		on / off	
.019	ULN > off	UTHR OFF	%Unom /VUnom	111,00% (63,83V)	100,00% (57,50V)	130,00% (74,75V)	100,00% (57,50V)	135,00% (77,63V)
.020	ULN > on	UTHR ON	%Unom /VUnom	110,00% (63,25V)	100,00% (57,50V)	110,00% (63,25V)	100,00% (57,50V)	135,00% (77,63V)
.021	T ULN >	Time OFF		60000 ms	50 ms	180000 ms	50 ms	300000 ms
Only active for:		Connection Modes: 2-wire, 4-wire (LN), 4-wire (LN+LL)						

Undervoltage1 Line to Neutral					Conformity Range		Possible Range	
ID				Default	Min	Max	Min	Max
.022	ULN <	Enable function		off	off		on / off	
.023	ULN < off	UTHR OFF	%Unom /VUnom	80,00% (46,00V)	10,00% (5,75V)	100,00% (57,50V)	10,00% (5,75V)	100,00% (57,50V)
.024	ULN < on	UTHR ON	%Unom /VUnom	84,00% (48,30V)	10,00% (5,75V)	100,00% (57,50V)	10,00% (5,75V)	100,00% (57,50V)
.025	T ULN <	Time OFF		60000 ms	50 ms	180000 ms	50 ms	300000 ms
Only active for:		Connection Modes: 2-wire, 4-wire (LN), 4-wire (LN+LL))						

Overvoltage2 Line to Line					Conformity Range		Possible Range	
ID				Default	Min	Max	Min	Max

.027	ULL>> off	UTHR OFF	%Unom /VUnom	115,00% (115,00V)	100,00% (100,00V)	130,00% (130,00V)	100,00% (100,00V)	135,00% (135,00V)
.028	ULL>> on	UTHR ON	%Unom /VUnom	110,00% (110,00V)	100,00% (100,00V)	110,00% (110,00V)	100,00% (100,00V)	135,00% (135,00V)
.029	T ULL>>	Time OFF		100 ms	50 ms	180000 ms	50 ms	300000 ms
Only active for:		Connection Modes: 3-wire, 4-wire (LN+LL)						

Overvoltage2 Line to Neutral					Conformity Range		Possible Range	
ID				Default	Min	Max	Min	Max
.034	ULN>>	Enable function		off	off		on / off	
.035	ULN>> off	UTHR OFF	%Unom /VUnom	115,00% (66,13V)	100,00% (57,50V)	130,00% (74,75V)	100,00% (57,50V)	135,00% (77,63V)
.036	ULN>> on	UTHR ON	%Unom /VUnom	110,00% (63,25V)	100,00% (57,50V)	110,00% (63,25V)	100,00% (57,50V)	135,00% (77,63V)
.037	T ULN>>	Time OFF		100 ms	50 ms	180000 ms	50 ms	300000 ms
Only active for:		Connection Modes: 2-wire, 4-wire (LN), 4-wire (LN+LL)						

Deactivation frequency monitoring LL					Conformity Range		Possible Range	
ID				Default	Min	Max	Min	Max
.047	f deact U<	UTHR OFF	%Unom	60,00% (60,00V)	9,50% (9,50V)	60,00% (60,00V)	2,00% (2,00V)	100,00% (100,00V)
		UTHR ON	%Unom	Fixed Hysteresis (0,50% (0,500 V) UNOM)				

Overfrequency1				Conformity Range		Possible Range	
ID			Default	Min	Max	Min	Max
.055	f > off	fTHR OFF	50,300 Hz	50,000 Hz	55,000 Hz	50,000 Hz	55,000 Hz
.056	f > on	fTHR ON	50,200 Hz	50,000 Hz	50,200 Hz	50,000 Hz	55,000 Hz

.057	T f >	Time OFF	2000 ms	50 ms	2000 ms	50 ms	300000 ms

Underfrequency1				Conformity Range		Possible Range	
ID			Default	Min	Max	Min	Max
.059	f < off	f_{THR} OFF	47,500 Hz	45,000 Hz	50,000 Hz	45,000 Hz	50,000 Hz
.060	f < on	f_{THR} ON	47,600 Hz	47,550 Hz	50,000 Hz	45,000 Hz	50,000 Hz
.061	T f <	Time OFF	50 ms	50 ms	50 ms	50 ms	300000 ms

Overfrequency2				Conformity Range		Possible Range	
ID			Default	Min	Max	Min	Max
.063	f >> off	f_{THR} OFF	51,500 Hz	50,000 Hz	55,000 Hz	50,000 Hz	55,000 Hz
.064	f >> on	f_{THR} ON	51,400 Hz	50,000 Hz	51,400 Hz	50,000 Hz	55,000 Hz
.065	T f >>	Time OFF	50 ms	50 ms	50 ms	50 ms	300000 ms

Frequency measuring in general				Conformity Range	
ID			Default	Min	Max
.113	F wnd	Window length	100 ms	100 ms	100 ms

Auxiliary Contact type				Conformity Range		Possible Range	
ID			Default	Min	Max	Min	Max
.099	Contact	Type	n.c (normally closed)	n.o. (normally opened) n.c. (normally closed)		n.o. (normally opened) n.c. (normally closed) dis. (disabled)	
.100	T Contact	Time OFF	Fixed to 500 ms				
.114	I3 STOP	Type	n.o. (normally opened)	n.o. (normally opened) n.c. (normally closed)		n.o. (normally opened) n.c. (normally closed) dis. (disabled)	

Turn-on delay	Conformity Range	Possible Range

ID			Default	Min	Max	Min	Max
.102	T on delay	Turn on time	600 s	0 s	600 s	0 s	900 s

Password					
ID			Default	Min	Max
.106	PW1	1st digit of Password	0	0	9
.107	PW2	2nd digit of Password	0	0	9
.108	PW3	3rd digit of Password	0	0	9
.109	PW4	4th digit of Password	0	0	9
Remark:		If all 4 digits of the Password are 0 (default setting) the Password request is skipped			

Errorlogic signalled (shown) on output relay channel D. Status display through yellow LED R3. On = it is possible to detect this error Off = it is not possible to detect this error	
Overvoltage LL	on
Undervoltage LL	on
Overvoltage LN	on
Undervoltage LN	on
10-min overvoltage	on
Overfrequency	on
Underfrequency	on
RoCoF (Rate of Change of Frequency)	on
Phase shift	on
Remote shutdown / self-test	on
Contactor feedback contact reports closed, although it should be open	on
Contactor feedback contact reports open, although it should be closed (no error, only info)	on

Device Information		
ID		
.105	SN: xxxxxxxxxx	xxxxxxxxxx = Device Serial Number

	SW: aa.dd.ccb	dd: Software version of Display Software aa: Software version of Measuring Software cc: Index of Configuration set b: Version of Configuration set

10.65 EN50438:2013 [ID 900]

Connection Mode			Conformity Range	Possible Range
ID		Default		
.003	Connection	Fixed to 4-wire (LN)		

Nominal Voltage					Conformity Range		Possible Range	
ID				Default	Min	Max	Min	Max
.005	ULN/LL nom	Unom Y	V	230.0	230.0	230.0	100.0	240.0
		Unom Δ	V	400.0	400.0	400.0	173.9	417.4

Functional Safety			Conformity Range	Possible Range
ID		Default		
.007	Errtol	Fixed to 2ch		
Remark:		2ch means: 2 channel with functional safety and 2 auxilliary contacts necessary		

Overvoltage1 Line to Neutral					Conformity Range		Possible Range	
ID				Default	Min	Max	Min	Max
.019	U > off	UTHR OFF	%Unom	115	115	115	100	135
.020	U > on	UTHR ON	%Unom	110	110	110	100	135
		Time OFF	ms	Fixed to 100ms				
Comment:		U > on has a fixed offset of 0.5% UNOM subtracted from the displayed value						

Undervoltage1 Line to Neutral					Conformity Range		Possible Range	
ID				Default	Min	Max	Min	Max
.023	U < off	UTHR OFF	%Unom	85	85	85	10	100
.024	U < on	UTHR ON	%Unom	85	85	85	10	100
.025	U < t	Time OFF	ms	1300	1300	1300	50	10000
Comment:		U < on has a fixed offset of 0.5% UNOM added to the displayed value						

10 minutes average overvoltage			Conformity Range		Possible Range	
ID		Default	Min	Max	Min	Max

.043	U avg off	U_{THR} OFF	%Unom	110	110	110	100	135
		U_{THR} ON	%Unom	Fixed Hysteresis (0.9% U_{NOM})				
		Time OFF	ms	Fixed to fastest possible disconnection				

Overfrequency1					Conformity Range		Possible Range	
ID				Default	Min	Max	Min	Max
.055	f > off	f_{THR} OFF	Hz	52.00	52.00	52.00	50.00	55.00
.056	f > on	f_{THR} ON	Hz	50.05	50.05	50.05	50.00	55.00
.057	f > t	Time OFF	ms	400	400	400	50	10000

Underfrequency1					Conformity Range		Possible Range	
ID				Default	Min	Max	Min	Max
.059	f < off	f_{THR} OFF	Hz	47.50	47.50	47.50	45.00	50.00
.060	f < on	f_{THR} ON	Hz	47.50	47.50	47.50	45.00	50.00
.061	f < t	Time OFF	ms	400	400	400	50	10000
Comment:		f < on has a fixed offset of 0.025 Hz added to the displayed value						

Frequency measuring in general					Conformity Range		Possible Range	
ID				Default	Min	Max	Min	Max
.113	F wnd	Window length	ms	Fixed window length 100ms				

Auxiliary Contact type				Conformity Range		Possible Range	
ID			Default	Min	Max	Min	Max
.099	Contact	Type	n.c. (normally closed)	n.o. (normally opened) n.c. (normally closed)		n.o. (normally opened) n.c. (normally closed) dis. (disabled)	
.100	T Contact	Time OFF	ms	Fixed to 500ms			
.114	I3 STOP	Type	n.o. (normally opened)	n.o. (normally opened) n.c. (normally closed)		n.o. (normally opened) n.c. (normally closed)	

				dis. (disabled)	dis. (disabled)

Turn-on delay					Conformity Range		Possible Range	
ID				Default	Min	Max	Min	Max
.102	Ton delay	Turn on time	s	60	60	60	0	900

Password					
ID			Default	Min	Max
.106	PW1	1st digit of Password	0	0	9
.107	PW2	2nd digit of Password	0	0	9
.108	PW3	3rd digit of Password	0	0	9
.109	PW4	4th digit of Password	0	0	9
Remark:		If all 4 digits of the Password are 0 (default setting) the Password request is skipped			

Device Information		
ID		
.105	ID: xxxxxxxxxx SW: aa.dd.ccb	xxxxxxxxxx = Device ID dd: Software version of Display Software aa: Software version of Measuring Software cc: Index of Configuration set b: Version of Configuration set

10.66 OVE E8001/8101:2014 [ID 801] renewed standard

Connection Mode			Conformity Range	Possible Range
ID		Default		
.003	Connection	4-wire (LN)	4-wire (LN)	2-wire, 3-wire, 4-wire (LN), 4-wire (LN+LL)

Nominal Voltage					Conformity Range		Possible Range	
ID				Default	Min	Max	Min	Max
.005	ULN/LL nom	Unom Y	V	230.0	230.0	230.0	28.8	241.4

		Unom Δ	V	400.0	400.0	400.0	50.0	420.0

Functional Safety			Conformity Range	Possible Range
ID		Default		
.007	Errtol	Fixed to 2ch		
Remark:		2ch means: 2 channel with functional safety and 2 auxilliary contacts necessary		

Overvoltage1 Line to Line					Conformity Range		Possible Range	
ID				Default	Min	Max	Min	Max
.011	ULLmax1off	UTHR OFF	%Unom	115	115	115	100	135
.012	ULLmax1on	UTHR ON	%Unom	110	110	110	100	135
.013	T ULL max1	Time OFF	ms	50	50	180000	50	180000
Comment:		ULLmax1on has a fixed offset of 0.5% UNOM subtracted from the displayed value						
Only active for:		Connection Modes: 3-wire, 4-wire (LN+LL)						

Undervoltage1 Line to Line					Conformity Range		Possible Range	
ID				Default	Min	Max	Min	Max
.015	ULLmin1off	UTHR OFF	%Unom	80	80	80	10	100
.016	ULLmin1on	UTHR ON	%Unom	90	90	90	10	100
.017	T ULL min1	Time OFF	ms	50	50	180000	50	180000
Comment:		ULLmin1on has a fixed offset of 0.5% UNOM added to the displayed value						
Only active for:		Connection Modes: 3-wire, 4-wire (LN+LL)						

Overvoltage1 Line to Neutral					Conformity Range		Possible Range	
ID				Default	Min	Max	Min	Max
.019	ULNmax1off	UTHR OFF	%Unom	115	115	115	100	135
.020	ULNmax1on	UTHR ON	%Unom	110	110	110	100	135
.021	T ULN max1	Time OFF	ms	50	50	180000	50	180000
Comment:		ULNmax1on has a fixed offset of 0.5% UNOM subtracted from the displayed value						
Only active for:		Connection Modes: 2-wire, 4-wire (LN), 4-wire (LN+LL)						

Undervoltage1 Line to Neutral					Conformity Range		Possible Range	
ID				Default	Min	Max	Min	Max
.023	ULNmin1off	U_{THR} OFF	%Unom	80	80	80	10	100
.024	ULNmin1on	U_{THR} ON	%Unom	90	90	90	10	100
.025	T ULN min1	Time OFF	ms	50	50	180000	50	180000
Comment:		ULNmin1on has a fixed offset of 0.5% U_{NOM} added to the displayed value						
Only active for:		Connection Modes: 2-wire, 4-wire (LN), 4-wire (LN+LL))						

Overvoltage2 Line to Line					Conformity Range		Possible Range	
ID				Default	Min	Max	Min	Max
.026	ULL max 2	Enable function		off	on / off		on /off	
.027	ULLmax2off	U_{THR} OFF	%Unom	105	100	135	100	135
.028	ULLmax2on	U_{THR} ON	%Unom	110	110	110	100	135
.029	T ULL max2	Time OFF	ms	60000	50	180000	50	180000
Comment:		ULLmax2on has a fixed offset of 0.5% U_{NOM} subtracted from the displayed value						
Only active for:		Connection Modes: 3-wire, 4-wire (LN+LL)						

Undervoltage2 Line to Line					Conformity Range		Possible Range	
ID				Default	Min	Max	Min	Max
.030	ULL min 2	Enable function		off	on / off		on /off	
.031	ULLmin2off	U_{THR} OFF	%Unom	30	10	100	10	100
.032	ULLmin2on	U_{THR} ON	%Unom	90	90	90	0	100
.033	T ULL min2	Time OFF	ms	50	50	180000	50	180000
Comment:		ULLmin2on has a fixed offset of 0.5% U_{NOM} added to the displayed value						
Only active for:		Connection Modes: 3-wire, 4-wire (LN+LL)						

Overvoltage2 Line to Neutral					Conformity Range		Possible Range	
ID				Default	Min	Max	Min	Max
.034	ULN max 2	Enable function		off	on / off		on /off	
.035	ULNmax2off	U_{THR} OFF	%Unom	105	100	135	100	135
.036	ULNmax2on	U_{THR} ON	%Unom	110	110	110	100	135

.037	T ULN max2	Time OFF	ms	60000	50	180000	50	180000
Comment:		ULNmax2on has a fixed offset of 0.5% U_{NOM} subtracted from the displayed value						
Only active for:		Connection Modes: 2-wire, 4-wire (LN), 4-wire (LN+LL)						

Undervoltage2 Line to Neutral					Conformity Range		Possible Range	
ID				Default	Min	Max	Min	Max
.038	ULN min 2	Enable function		off	on / off		on /off	
.039	ULNmin2off	U_{THR} OFF	%Unom	30	10	100	10	100
.040	ULNmin2on	U_{THR} ON	%Unom	90	90	90	0	100
.041	T ULN min2	Time OFF	ms	50	50	180000	50	180000
Comment:		ULNmin2on has a fixed offset of 0.5% U_{NOM} added to the displayed value						
Only active for:		Connection Modes: 2-wire, 4-wire (LN), 4-wire (LN+LL)						

10 minutes average overvoltage					Conformity Range		Possible Range	
ID				Default	Min	Max	Min	Max
.042	U avg	Enable function		on	on		on /off	
.043	U avg off	U_{THR} OFF	%Unom	112	110	115	100	135
		U_{THR} ON	%Unom	Fixed Hysteresis (0.9% U_{NOM})				
		Time OFF	ms	Fixed to fastest possible disconnection				

Overfrequency1					Conformity Range		Possible Range	
ID				Default	Min	Max	Min	Max
.055	f > off	f_{THR} OFF	Hz	51.50	51.50	51.50	50.00	55.00
		f_{THR} ON	Hz	Fixed reconnection frequency of 50.05Hz				
		Time OFF	ms	Fixed to fastest possible disconnection				

Underfrequency1					Conformity Range		Possible Range	
ID				Default	Min	Max	Min	Max
.059	f < off	f_{THR} OFF	Hz	47.50	47.50	47.50	45.00	50.00
.060	f < on	f_{THR} ON	Hz	47.50	47.50	47.50	45.00	50.00
		Time OFF	ms	Fixed to fastest possible disconnection				

Comment:	f < on has a fixed offset of 0.01 Hz added to the displayed value

Frequency measuring in general					Conformity Range		Possible Range	
ID				Default	Min	Max	Min	Max
.113	F wnd	Window length	ms	Fixed window length 100ms				

Auxiliary Contact type					Conformity Range		Possible Range	
ID				Default	Min	Max	Min	Max
.099	Contact	Type		n.c. (normally closed)	n.o. (normally opened) n.c. (normally closed)		n.o. (normally opened) n.c. (normally closed) dis. (disabled)	
.100	T Contact	Time OFF	ms	Fixed to 500ms				
.114	I3 STOP	Type		n.o. (normally opened)	n.o. (normally opened) n.c. (normally closed) dis. (disabled)		n.o. (normally opened) n.c. (normally closed) dis. (disabled)	

Turn-on delay					Conformity Range		Possible Range	
ID				Default	Min	Max	Min	Max
.102	Ton delay	Turn on time	s	30	30	30	0	900

Password					
ID			Default	Min	Max
.106	PW1	1st digit of Password	0	0	9
.107	PW2	2nd digit of Password	0	0	9
.108	PW3	3rd digit of Password	0	0	9
.109	PW4	4th digit of Password	0	0	9
Remark:	If all 4 digits of the Password are 0 (default setting) the Password request is skipped				

Device Information

ID		
.105	ID: xxxxxxxxxx SW: aa.dd.ccb	xxxxxxxxxx = Device ID dd: Software version of Display Software aa: Software version of Measuring Software cc: Index of Configuration set b: Version of Configuration set

10.67 VDE 0124-100:2013 [ID 300] renewed standard

Connection Mode			Conformity Range	Possible Range
ID		Default		
.003	Connection	Fixed to 4-wire (LN+LL)		

Nominal Voltage					Conformity Range		Possible Range	
ID				Default	Min	Max	Min	Max
.005	ULN/LL nom	Unom Y Unom Δ	V V	Fixed to 230.0 / 400.0				

Functional Safety			Conformity Range	Possible Range
ID		Default		
.007	Errtol	Fixed to 2ch		
Remark:		2ch means: 2 channel with functional safety and 2 auxilliary contacts necessary		

Overvoltage1 Line to Line					Conformity Range		Possible Range	
ID				Default	Min	Max	Min	Max
.011	ULLmax off	U_{THR} OFF	%Unom	115	115	115	100	135
.012	ULLmax on	U_{THR} ON	%Unom	110	110	110	100	135
		Time OFF	ms	Fixed to fastest possible disconnection				
Comment:		ULLmax on has a fixed offset of 0.5% U_{NOM} subtracted from the displayed value						

Undervoltage1 Line to Line				Conformity Range		Possible Range	
ID			Default	Min	Max	Min	Max

.015	ULLmin off	U_{THR} OFF	%Unom	80	80	80	10	100
.016	ULLmin on	U_{THR} ON	%Unom	85	85	85	10	100
		Time OFF	ms	Fixed to fastest possible disconnection				
Comment:		ULLmin on has a fixed offset of 0.5% U_{NOM} added to the displayed value						

Overvoltage1 Line to Neutral					Conformity Range		Possible Range	
ID				Default	Min	Max	Min	Max
.019	U >> off	U_{THR} OFF	%Unom	115	115	115	100	135
.020	U >> on	U_{THR} ON	%Unom	110	110	110	100	135
		Time OFF	ms	Fixed to fastest possible disconnection				
Comment:		U >> on has a fixed offset of 0.5% U_{NOM} subtracted from the displayed value						

Undervoltage1 Line to Neutral					Conformity Range		Possible Range	
ID				Default	Min	Max	Min	Max
.023	U < off	U_{THR} OFF	%Unom	80	80	80	10	100
.024	U < on	U_{THR} ON	%Unom	85	85	85	10	100
		Time OFF	ms	Fixed to fastest possible disconnection				
Comment:		U < on has a fixed offset of 0.5% U_{NOM} added to the displayed value						

10 minutes average overvoltage					Conformity Range		Possible Range	
ID				Default	Min	Max	Min	Max
.043	U>	U_{THR} OFF	%Unom	110	110	115	100	135
		U_{THR} ON	%Unom	Fixed Hysteresis (0.9% U_{NOM})				
		Time OFF	ms	Fixed to fastest possible disconnection				

Overfrequency1					Conformity Range		Possible Range	
ID				Default	Min	Max	Min	Max
.055	f > off	f_{THR} OFF	Hz	51.50	51.50	51.50	50.00	55.00
.056	f > on	f_{THR} ON	Hz	50.05	50.05	50.05	50.00	55.00
		Time OFF	ms	Fixed to fastest possible disconnection				

Underfrequency1					Conformity Range		Possible Range	
ID				Default	Min	Max	Min	Max
.059	f < off	f_{THR} OFF	Hz	47.50	47.50	47.50	45.00	50.00
.060	f < on	f_{THR} ON	ms	47.50	47.50	47.50	45.00	50.00
		f_{THR} ON	Hz	Fixed reconnection frequency of 50.05Hz				
		Time OFF	ms	Fixed to fastest possible disconnection				
Comment:		f < on has a fixed offset of 0.025 Hz added to the displayed value						

Random overfrequency					Conformity Range		Possible Range	
ID				Default	Min	Max	Min	Max
.086	f> random	Enable function		off	on / off		on /off	
.087	f> random	f_{THR} OFF	Hz		50.20	51.50	50.20	51.50
		f_{THR} ON	Hz	Fixed reconnection frequency of 50.05Hz				
		Time OFF	ms	Fixed to fastest possible disconnection				
Comment:		The random f_{THR} OFF threshold is shown in .087 and cannot be edited						

Frequency measuring in general					Conformity Range		Possible Range	
ID				Default	Min	Max	Min	Max
.113	F wnd	Window length	ms	Fixed window length 100ms				

Auxiliary Contact type					Conformity Range		Possible Range	
ID			Default		Min	Max	Min	Max
.099	Contact	Type	n.c. (normally closed)		n.o. (normally opened) n.c. (normally closed)		n.o. (normally opened) n.c. (normally closed) dis. (disabled)	
.100	T Contact	Time OFF	ms	Fixed to 500ms				
.114	I3 STOP	Type	n.o. (normally opened)		n.o. (normally opened) n.c. (normally closed) dis. (disabled)		n.o. (normally opened) n.c. (normally closed) dis. (disabled)	

Turn-on delay					Conformity Range		Possible Range	
ID				Default	Min	Max	Min	Max
.102	Ton delay	Turn on time	s	60	60	60	0	900

Random Turn-on delay					Conformity Range		Possible Range	
ID				Default	Min	Max	Min	Max
.103	Ton random	Enable function		off	on / off		on / off	
.104	Ton random	Turn on time	s		60	600	60	600
Comment:		The random time value is shown in .104 and cannot be edited						

Password					
ID			Default	Min	Max
.106	PW1	1st digit of Password	0	0	9
.107	PW2	2nd digit of Password	0	0	9
.108	PW3	3rd digit of Password	0	0	9
.109	PW4	4th digit of Password	0	0	9
Remark:	If all 4 digits of the Password are 0 (default setting) the Password request is skipped				

Device Information		
ID		
.105	ID: xxxxxxxxxx SW: aa.dd.ccb	xxxxxxxxxx = Device ID dd: Software version of Display Software aa: Software version of Measuring Software cc: Index of Configuration set b: Version of Configuration set

24. TR3 Rev23:2013 [ID 700] renewed standard

Connection Mode			Conformity Range	Possible Range
ID		Default		
.003	Connection	4-wire (LN)	3-wire, 4-wire (LN)	2-wire, 3-wire, 4-wire (LN),

				4-wire (LN+LL)

Nominal Voltage					Conformity Range		Possible Range	
ID				Default	Min	Max	Min	Max
.005	ULN/LL nom	Unom Y	V	230.0	57.5	230.0	28.8	241.4
		Unom Δ	V	400.0	100.0	400.0	50.0	420.0

Functional Safety			Conformity Range	Possible Range
ID		Default		
.007	Errtol	Fixed to 1ch		
Remark:		1ch means: 1 channel without functional safety and 1 auxilliary contact1 necessary		

Overvoltage1 Line to Line					Conformity Range		Possible Range	
ID				Default	Min	Max	Min	Max
.011	ULL>> Off	UTHR OFF	%Unom	120	100	130	100	135
		UTHR ON	%Unom	Fixed Hysteresis (1% UNOM)				
.013	T ULL>>	Time OFF	ms	50	50	50	50	10000
Only active for:		Connection Modes: 3-wire, 4-wire (LN+LL)						

Undervoltage1 Line to Line					Conformity Range		Possible Range	
ID				Default	Min	Max	Min	Max
.015	ULL< Off	UTHR OFF	%Unom	80	10	100	10	100
.016	ULL< On	UTHR ON	%Unom	95	95	95	10	100
.017	T ULL<	Time OFF	ms	1500	1500	2400	50	10000
Comment:		ULL< On has a fixed offset of 0.5% UNOM added to the displayed value						
Only active for:		Connection Modes: 3-wire, 4-wire (LN+LL)						

Overvoltage1 Line to Neutral					Conformity Range		Possible Range	
ID				Default	Min	Max	Min	Max
.019	ULN>> Off	UTHR OFF	%Unom	120	100	130	100	135
		UTHR ON		Fixed Hysteresis (1% UNOM)				

.021	T ULN>>	Time OFF	ms	50	50	50	50	10000
Only active for:		Connection Modes: 2-wire, 4-wire (LN), 4-wire (LN+LL)						

Undervoltage1 Line to Neutral					Conformity Range		Possible Range	
ID				Default	Min	Max	Min	Max
.023	ULN< Off	U_{THR} OFF	%Unom	80	10	100	10	100
.024	ULN< On	U_{THR} ON	%Unom	95	95	95	10	100
.025	T ULN<	Time OFF	ms	1500	1500	2400	50	10000
Comment:		ULN< On has a fixed offset of 0.5% U_{NOM} added to the displayed value						
Only active for:		Connection Modes: 2-wire, 4-wire (LN), 4-wire (LN+LL))						

Undervoltage2 Line to Line					Conformity Range		Possible Range	
ID				Default	Min	Max	Min	Max
.031	ULL<< Off	U_{THR} OFF	%Unom	45	10	100	0	100
.032	ULL<< On	U_{THR} ON	%Unom	95	95	95	10	100
.033	T ULL<<	Time OFF	ms	300	300	300	50	10000
Comment:		ULL<< On has a fixed offset of 0.5% U_{NOM} added to the displayed value						
Only active for:		Connection Modes: 3-wire, 4-wire (LN+LL)						

Undervoltage2 Line to Neutral					Conformity Range		Possible Range	
ID				Default	Min	Max	Min	Max
.039	ULN<< Off	U_{THR} OFF	%Unom	45	10	100	0	100
.040	ULN<< On	U_{THR} ON	%Unom	95	95	95	10	100
.041	T ULN<<	Time OFF	ms	300	300	300	50	10000
Comment:		ULN<< On has a fixed offset of 0.5% U_{NOM} added to the displayed value						
Only active for:		Connection Modes: 2-wire, 4-wire (LN), 4-wire (LN+LL)						

Overfrequency1					Conformity Range		Possible Range	
ID				Default	Min	Max	Min	Max
.055	f> Off	f_{THR} OFF	Hz	51.50	50.00	52.00	50.00	55.00
.056	f> On	f_{THR} ON	Hz	50.05	50.05	50.05	50.00	55.00

.057	T f>	Time OFF	ms	50	50	50	50	10000

Underfrequency1					Conformity Range		Possible Range	
ID				Default	Min	Max	Min	Max
.059	f< Off	f_{THR} OFF	Hz	47.50	47.50	50.00	45.00	50.00
.060	f< On	f_{THR} ON	Hz	47.50	47.50	47.50	45.00	50.00
.061	T f<	Time OFF	ms	50	50	50	50	10000
Comment:		f< On has a fixed offset of 0.025 Hz added to the displayed value						

Frequency measuring in general					Conformity Range		Possible Range	
ID				Default	Min	Max	Min	Max
.113	F wnd	Window length	ms	Fixed window length 100ms				

Auxiliary Contact type				Conformity Range		Possible Range	
ID			Default	Min	Max	Min	Max
.099	Contact	Type	dis. (disabled)	n.o. (normally opened) n.c. (normally closed) dis. (disabled)		n.o. (normally opened) n.c. (normally closed) dis. (disabled)	
.100	T Contact	Time OFF	ms	Fixed to 500ms			
.114	I3 STOP	Type	n.o. (normally opened)	n.o. (normally opened) n.c. (normally closed) dis. (disabled)		n.o. (normally opened) n.c. (normally closed) dis. (disabled)	

Turn-on delay					Conformity Range		Possible Range	
ID				Default	Min	Max	Min	Max
.102	Ton delay	Turn on time	s	60	0	60	0	900

Password				
ID		Default	Min	Max

.106	PW1	1st digit of Password	0	0	9
.107	PW2	2nd digit of Password	0	0	9
.108	PW3	3rd digit of Password	0	0	9
.109	PW4	4th digit of Password	0	0	9
Remark:		If all 4 digits of the Password are 0 (default setting) the Password request is skipped			

Device Information		
ID		
.105	ID: xxxxxxxxxx SW: aa.dd.ccb	xxxxxxxxxx = Device ID dd: Software version of Display Software aa: Software version of Measuring Software cc: Index of Configuration set b: Version of Configuration set

10.68 AS/NZS 4777.2:2015 [ID 1102] renewed standard

Connection Mode			Conformity Range	Possible Range
ID		Default		
.003	Connection	4-wire (LN)	4-wire (LN)	2-wire, 3-wire, 4-wire (LN), 4-wire (LN+LL)

Nominal Voltage					Conformity Range		Possible Range	
ID				Default	Min	Max	Min	Max
.005	ULN/LL nom	Unom Y Unom Δ	V V	230.0 400.0	230.0 400.0	240.0 417.4	100.0 173.9	240.0 417.4

Functional Safety			Conformity Range	Possible Range
ID		Default		
.007	Errtol	Fixed to 2ch		
Remark:		2ch means: 2 channel with functional safety and 2 auxilliary contacts necessary		

Overvoltage1 Line to Neutral	Conformity Range	Possible Range

ID				Default	Min	Max	Min	Max
.019	V> off	U_{THR} OFF	%Unom	113	113	113	100	135
.020	V> on	U_{THR} ON	%Unom	111	100	112	100	135
.021	T V>	Time OFF	ms	2000	1100	2000	100	300000

Undervoltage1 Line to Neutral					Conformity Range		Possible Range	
ID				Default	Min	Max	Min	Max
.023	V< off	U_{THR} OFF	%Unom	78	78	78	0	100
.024	V< on	U_{THR} ON	%Unom	80	79	100	0	100
.025	T V<	Time OFF	ms	2000	1100	2000	100	300000

Overvoltage2 Line to Neutral					Conformity Range		Possible Range	
ID				Default	Min	Max	Min	Max
.034	V>>	Enable function		off	on /off		on /off	
.035	V>> off	U_{THR} OFF	%Unom	115	115	115	100	135
.036	V>> on	U_{THR} ON	%Unom	111	100	112	100	135
.037	T V>>	Time OFF	ms	200	100	200	100	300000

10 minutes average overvoltage					Conformity Range		Possible Range	
ID				Default	Min	Max	Min	Max
.042	Uavg	Enable function		on	on / off		on /off	
.043	Uavg off	U_{THR} OFF	%Unom	112	112	112	100	135
.044	Uavg on	U_{THR} ON	%Unom	111	100	111	100	135
		Time OFF	ms	Fixed to fastest possible disconnection				

Overfrequency1					Conformity Range		Possible Range	
ID				Default	Min	Max	Min	Max
.055	F> off	f_{THR} OFF	Hz	52.00	52.00	52.00	50.00	55.00
.056	F> on	f_{THR} ON	Hz	51.90	50.00	51.90	50.00	55.00
.057	T F>	Time OFF	ms	2000	100	2000	100	300000

Underfrequency1					Conformity Range		Possible Range	
ID				Default	Min	Max	Min	Max
.059	F< off	f_{THR} OFF	Hz	47.00	45.00	47.00	40.00	50.00
.060	F< on	f_{THR} ON	Hz	47.50	45.50	50.00	40.00	50.00
.061	T F<	Time OFF	ms	2000	1100	2000	1000	300000

Frequency measuring in general					Conformity Range		Possible Range	
ID				Default	Min	Max	Min	Max
.113	F wnd	Window length	ms	Fixed window length 100ms				

Rate of Change of Frequency (RoCoF)					Conformity Range		Possible Range	
ID				Default	Min	Max	Min	Max
.090	RoCoF	Enable Function		on	on / off		on / off	
.091	RoCoF off	RoCoF$_{THR}$ OFF	mHz/s	1000	10	3000	10	3000
.092	RoCoF on	RoCoF$_{THR}$ ON	mHz/s	950	10	3000	10	3000
.093	RoCoFDelay	Time OFF	ms	500	50	500	50	10000
.111	RoCoF wnd	Window length	ms	225	100	1000	100	1000

Phase Shift (PShift)					Conformity Range		Possible Range	
ID				Default	Min	Max	Min	Max
.094	PShift	Enable Function		on	on / off		on / off	
.095	PShift off	PShift $_{THR}$ OFF	°	8	1	8	1	15
.096	PShift on	PShift $_{THR}$ ON	°	6	1	7	1	15
.097	PShiftDel	Time OFF	ms	50	50	50	50	10000
.112	PShift wnd	Window length	ms	50	50	500	50	1000

Auxiliary Contact type				Conformity Range		Possible Range	
ID			Default	Min	Max	Min	Max
.099	Contact	Type	dis. (disabled)	n.o. (normally opened) n.c. (normally closed)		n.o. (normally opened) n.c. (normally closed)	

					dis. (disabled)	dis. (disabled)
.100	T Contact	Time OFF	ms	Fixed to 500ms		
.114	I3 STOP	Type		n.o. (normally opened)	n.o. (normally opened) n.c. (normally closed) dis. (disabled)	n.o. (normally opened) n.c. (normally closed) dis. (disabled)

Turn-on delay					Conformity Range		Possible Range	
ID				Default	Min	Max	Min	Max
.102	Ton delay	Turn on time	s	60	0	60	0	900

Password					
ID			Default	Min	Max
.106	PW1	1st digit of Password	0	0	9
.107	PW2	2nd digit of Password	0	0	9
.108	PW3	3rd digit of Password	0	0	9
.109	PW4	4th digit of Password	0	0	9
Remark:		If all 4 digits of the Password are 0 (default setting) the Password request is skipped			

Device Information		
ID		
.105	ID: xxxxxxxxxx	xxxxxxxxxx = Device ID
	SW: aa.dd.ccb	dd: Software version of Display Software aa: Software version of Measuring Software cc: Index of Configuration set b: Version of Configuration set

25. G59/3/3:2015 LV [ID 405] renewed standard

Connection Mode			Conformity Range	Possible Range
ID		Default		

.003	Connection	Fixed to 4-wire (LN)

Nominal Voltage					Conformity Range		Possible Range	
ID				Default	Min	Max	Min	Max
.005	ULN/LL nom	Unom Y	V	230.0	230.0	240.0	100.0	240.0
		Unom Δ	V	400.0	400.0	417.4	173.9	417.4

Functional Safety			Conformity Range	Possible Range
ID		Default		
.007	Errtol	Fixed to 1ch		
Remark:		1ch means: 1 channel without functional safety and 1 auxilliary contact1 necessary		

Overvoltage1 Line to Neutral					Conformity Range		Possible Range	
ID				Default	Min	Max	Min	Max
.019	O/V st 1	UTHR OFF	%Unom	114	114	114	100	135
		UTHR ON	%Unom	Fixed Hysteresis (0.75% UNOM)				
.021	T O/V st 1	Time OFF	ms	1000	1000	1000	50	300000

Undervoltage1 Line to Neutral					Conformity Range		Possible Range	
ID				Default	Min	Max	Min	Max
.023	U/V st 1	UTHR OFF	%Unom	87	87	87	0	100
		UTHR ON	%Unom	Fixed Hysteresis (0.75% UNOM)				
.025	T U/V st 1	Time OFF	ms	2500	2500	2500	50	300000

Overvoltage2 Line to Neutral					Conformity Range		Possible Range	
ID				Default	Min	Max	Min	Max
.035	O/V st 2	UTHR OFF	%Unom	119	119	119	100	135
		UTHR ON	%Unom	Fixed Hysteresis (0.75% UNOM)				
.037	T O/V st 2	Time OFF	ms	500	500	500	50	300000

Undervoltage2 Line to Neutral	Conformity Range	Possible Range

ID				Default	Min	Max	Min	Max
.039	U/V st 2	U_{THR} OFF	%Unom	80	80	80	0	100
		U_{THR} ON	%Unom	Fixed Hysteresis (0.75% U_{NOM})				
.041	T U/V st 2	Time OFF	ms	500	500	500	50	300000

Overfrequency1					Conformity Range		Possible Range	
ID				Default	Min	Max	Min	Max
.055	O/F st 1	f_{THR} OFF	Hz	51.50	51.50	51.50	50.00	55.00
		f_{THR} ON	Hz	Fixed Hysteresis (0.05 Hz)				
.057	T O/F st 1	Time OFF	ms	90000	90000	90000	1000	300000

Underfrequency1					Conformity Range		Possible Range	
ID				Default	Min	Max	Min	Max
.059	U/F st 1	f_{THR} OFF	Hz	47.50	47.50	47.50	40.00	50.00
		f_{THR} ON	Hz	Fixed Hysteresis (0.05 Hz)				
.061	T U/F st 1	Time OFF	ms	20000	20000	20000	1000	300000

Overfrequency2					Conformity Range		Possible Range	
ID				Default	Min	Max	Min	Max
.063	O/F st 2	f_{THR} OFF	Hz	52.00	52.00	52.00	50.00	55.00
		f_{THR} ON	Hz	Fixed Hysteresis (0.05 Hz)				
.065	T O/F st 2	Time OFF	ms	500	500	500	50	300000

Underfrequency2					Conformity Range		Possible Range	
ID				Default	Min	Max	Min	Max
.067	U/F st 2	f_{THR} OFF	Hz	47.00	47.00	47.00	40.00	50.00
		f_{THR} ON	Hz	Fixed Hysteresis (0.05 Hz)				
.069	T U/F st 2	Time OFF	ms	500	500	500	50	300000

Frequency measuring in general			Conformity Range		Possible Range	
ID		Default	Min	Max	Min	Max

.113	F wnd	Window length	ms	Fixed window length 100ms

Rate of Change of Frequency (RoCoF)					Conformity Range		Possible Range	
ID				Default	Min	Max	Min	Max
.090	RoCoF	Enable Function		on	on / off		on / off	
.091	RoCoF off	RoCoF$_{THR}$ OFF	mHz/s	1000	10	3000	10	3000
.092	RoCoF on	RoCoF$_{THR}$ ON	mHz/s	950	10	3000	10	3000
.093	RoCoFDelay	Time OFF	ms	500	50	2000	50	2000
.111	RoCoF wnd	Window length	ms	Fixed window length 225ms				

Phase Shift (PShift)					Conformity Range		Possible Range	
ID				Default	Min	Max	Min	Max
.094	PShift	Enable Function		off	on / off		on / off	
.095	PShift off	PShift $_{THR}$ OFF	°	12	6	12	3	15
.096	PShift on	PShift $_{THR}$ ON	°	9	5	11	3	15
		Time OFF	ms	Fixed to the fastest possible disconnection				
.112	PShift wnd	Window length	ms	Fixed window length 200ms				

Auxiliary Contact type				Conformity Range		Possible Range	
ID			Default	Min	Max	Min	Max
.099	Contact	Type	dis. (disabled)	n.o. (normally opened) n.c. (normally closed) dis. (disabled)		n.o. (normally opened) n.c. (normally closed) dis. (disabled)	
.100	T Contact	Time OFF	ms	Fixed to 500ms			
.114	I3 STOP	Type	n.o. (normally opened)	n.o. (normally opened) n.c. (normally closed) dis. (disabled)		n.o. (normally opened) n.c. (normally closed) dis. (disabled)	

Turn-on delay	Conformity Range	Possible Range

ID				Default	Min	Max	Min	Max
.102	Ton delay	Turn on time	s	20	20	20	0	900

Password					
ID			Default	Min	Max
.106	PW1	1st digit of Password	0	0	9
.107	PW2	2nd digit of Password	0	0	9
.108	PW3	3rd digit of Password	0	0	9
.109	PW4	4th digit of Password	0	0	9
Remark:		If all 4 digits of the Password are 0 (default setting) the Password request is skipped			

Device Information		
ID		
.105	ID: xxxxxxxxxx SW: aa.dd.ccb	xxxxxxxxxx = Device ID dd: Software version of Display Software aa: Software version of Measuring Software cc: Index of Configuration set b: Version of Configuration set

10.69 G59/3/3:2015 MV [ID 455] renewed standard

Connection Mode			Conformity Range	Possible Range
ID		Default		
.003	Connection	Fixed to 3-wire		

Nominal Voltage					Conformity Range		Possible Range	
ID				Default	Min	Max	Min	Max
.005	ULN/LL nom	Unom Y	V	230.0	57.5	230.0	28.8	241.4
		Unom Δ	V	400.0	100.0	400.0	50.0	420.0

Functional Safety			Conformity Range	Possible Range
ID		Default		

.007	Errtol	Fixed to 1ch
Remark:		1ch means: 1 channel without functional safety and 1 auxilliary contact1 necessary

Overvoltage1 Line to Line					Conformity Range		Possible Range	
ID				Default	Min	Max	Min	Max
.011	O/V st 1	U_{THR} OFF	%Unom	110	110	110	100	135
		U_{THR} ON	%Unom	Fixed Hysteresis (0.75% U_{NOM})				
.013	T O/V st 1	Time OFF	ms	1000	1000	1000	50	300000

Undervoltage1 Line to Line					Conformity Range		Possible Range	
ID				Default	Min	Max	Min	Max
.015	U/V st 1	U_{THR} OFF	%Unom	87	87	87	0	100
		U_{THR} ON	%Unom	Fixed Hysteresis (0.75% U_{NOM})				
.017	T U/V st 1	Time OFF	ms	2500	2500	2500	50	300000

Overvoltage2 Line to Line					Conformity Range		Possible Range	
ID				Default	Min	Max	Min	Max
.027	O/V st 2	U_{THR} OFF	%Unom	113	113	113	100	135
		U_{THR} ON	%Unom	Fixed Hysteresis (0.75% U_{NOM})				
.029	T O/V st 2	Time OFF	ms	500	500	500	50	300000

Undervoltage2 Line to Line					Conformity Range		Possible Range	
ID				Default	Min	Max	Min	Max
.031	U/V st 2	U_{THR} OFF	%Unom	80	80	80	0	100
		U_{THR} ON	%Unom	Fixed Hysteresis (0.75% U_{NOM})				
.033	T U/V st 2	Time OFF	ms	500	500	500	50	300000

Overfrequency1					Conformity Range		Possible Range	
ID				Default	Min	Max	Min	Max
.055	O/F st 1	f_{THR} OFF	Hz	51.50	51.50	51.50	50.00	55.00
		f_{THR} ON	Hz	Fixed Hysteresis (0.05 Hz)				

.057	T O/F st 1	Time OFF	ms	90000	90000	90000	1000	300000

Underfrequency1					Conformity Range		Possible Range	
ID				Default	Min	Max	Min	Max
.059	U/F st 1	f_{THR} OFF	Hz	47.50	47.50	47.50	40.00	50.00
		f_{THR} ON	Hz	Fixed Hysteresis (0.05 Hz)				
.061	T U/F st 1	Time OFF	ms	20000	20000	20000	1000	300000

Overfrequency2					Conformity Range		Possible Range	
ID				Default	Min	Max	Min	Max
.063	O/F st 2	f_{THR} OFF	Hz	52.00	52.00	52.00	50.00	55.00
		f_{THR} ON	Hz	Fixed Hysteresis (0.05 Hz)				
.065	T O/F st 2	Time OFF	ms	500	500	500	50	300000

Underfrequency2					Conformity Range		Possible Range	
ID				Default	Min	Max	Min	Max
.067	U/F st 2	f_{THR} OFF	Hz	47.00	47.00	47.00	40.00	50.00
		f_{THR} ON	Hz	Fixed Hysteresis (0.05 Hz)				
.069	T U/F st 2	Time OFF	ms	500	500	500	50	300000

Frequency measuring in general					Conformity Range		Possible Range	
ID				Default	Min	Max	Min	Max
.113	F wnd	Window length	ms	Fixed window length 100ms				

Rate of Change of Frequency (RoCoF)					Conformity Range		Possible Range	
ID				Default	Min	Max	Min	Max
.090	RoCoF	Enable Function		on	on / off		on / off	
.091	RoCoF off	RoCoF$_{THR}$ OFF	mHz/s	1000	10	3000	10	3000
.092	RoCoF on	RoCoF$_{THR}$ ON	mHz/s	950	10	3000	10	3000
.093	RoCoFDelay	Time OFF	ms	500	50	2000	50	2000
.111	RoCoF wnd	Window length	ms	Fixed window length 225ms				

Phase Shift (PShift)					Conformity Range		Possible Range	
ID				Default	Min	Max	Min	Max
.094	PShift	Enable Function		off	on / off		on / off	
.095	PShift off	PShift$_{\text{THR}}$ OFF	°	12	6	12	3	15
.096	PShift on	PShift$_{\text{THR}}$ ON	°	9	5	11	3	15
		Time OFF	ms	Fixed to the fastest possible disconnection				
.112	PShift wnd	Window length	ms	Fixed window length 200ms				
Comment:		PShift off has a fixed offset of 0.2° subtracted from the displayed value						

Auxiliary Contact type					Conformity Range		Possible Range	
ID			Default		Min	Max	Min	Max
.099	Contact	Type	dis. (disabled)		n.o. (normally opened) n.c. (normally closed) dis. (disabled)		n.o. (normally opened) n.c. (normally closed) dis. (disabled)	
.100	T Contact	Time OFF	ms	Fixed to 500ms				
.114	I3 STOP	Type	n.o. (normally opened)		n.o. (normally opened) n.c. (normally closed) dis. (disabled)		n.o. (normally opened) n.c. (normally closed) dis. (disabled)	

Turn-on delay					Conformity Range		Possible Range	
ID				Default	Min	Max	Min	Max
.102	Ton delay	Turn on time	s	20	20	20	0	900

Password					
ID			Default	Min	Max
.106	PW1	1st digit of Password	0	0	9
.107	PW2	2nd digit of Password	0	0	9
.108	PW3	3rd digit of Password	0	0	9

.109	PW4	4th digit of Password	0	0	9
Remark:		If all 4 digits of the Password are 0 (default setting) the Password request is skipped			

Device Information		
ID		
.105	ID: xxxxxxxxxx SW: aa.dd.ccb	xxxxxxxxxx = Device ID dd: Software version of Display Software aa: Software version of Measuring Software cc: Index of Configuration set b: Version of Configuration set

10.70 G83/2:2012 [ID 500] renewed standard

Connection Mode			Conformity Range	Possible Range
ID		Default		
.003	Connection	Fixed to 4-wire (LN)		

Nominal Voltage					Conformity Range		Possible Range	
ID				Default	Min	Max	Min	Max
.005	ULN/LL nom	Unom Y	V	230.0	230.0	240.0	100.0	240.0
		Unom Δ	V	400.0	400.0	417.4	173.9	417.4

Functional Safety			Conformity Range	Possible Range
ID		Default		
.007	Errtol	Fixed to 1ch		
Remark:		1ch means: 1 channel without functional safety and 1 auxilliary contact1 necessary		

Overvoltage1 Line to Neutral					Conformity Range		Possible Range	
ID				Default	Min	Max	Min	Max
.019	O/V st 1	U_{THR} OFF	%Unom	114	114	114	100	135
		U_{THR} ON	%Unom	Fixed Hysteresis (0.75% U_{NOM})				

.021	T O/V st 1	Time OFF	ms	1000	1000	1000	50	10000

Undervoltage1 Line to Neutral					Conformity Range		Possible Range	
ID				Default	Min	Max	Min	Max
.023	U/V st 1	U_{THR} OFF	%Unom	87	87	87	0	100
		U_{THR} ON	%Unom	Fixed Hysteresis (0.75% U_{NOM})				
.025	T U/V st 1	Time OFF	ms	2500	2500	2500	50	10000

Overvoltage2 Line to Neutral					Conformity Range		Possible Range	
ID				Default	Min	Max	Min	Max
.035	O/V st 2	U_{THR} OFF	%Unom	119	119	119	100	135
		U_{THR} ON	%Unom	Fixed Hysteresis (0.75% U_{NOM})				
.037	T O/V st 2	Time OFF	ms	500	500	500	50	10000

Undervoltage2 Line to Neutral					Conformity Range		Possible Range	
ID				Default	Min	Max	Min	Max
.039	U/V st 2	U_{THR} OFF	%Unom	80	80	80	0	100
		U_{THR} ON	%Unom	Fixed Hysteresis (0.75% U_{NOM})				
.041	T U/V st 2	Time OFF	ms	500	500	500	50	10000

Overfrequency1					Conformity Range		Possible Range	
ID				Default	Min	Max	Min	Max
.055	O/F st 1	f_{THR} OFF	Hz	51.50	51.50	51.50	50.00	55.00
		f_{THR} ON	Hz	Fixed Hysteresis (0.05 Hz)				
.057	T O/F st 1	Time OFF	ms	90000	90000	90000	1000	120000

Underfrequency1					Conformity Range		Possible Range	
ID				Default	Min	Max	Min	Max
.059	U/F st 1	f_{THR} OFF	Hz	47.50	47.50	47.50	40.00	50.00
		f_{THR} ON	Hz	Fixed Hysteresis (0.05 Hz)				
.061	T U/F st 1	Time OFF	ms	20000	20000	20000	1000	120000

Overfrequency2					Conformity Range		Possible Range	
ID				Default	Min	Max	Min	Max
.063	O/F st 2	f_{THR} OFF	Hz	52.00	52.00	52.00	50.00	55.00
		f_{THR} ON	Hz	Fixed Hysteresis (0.05 Hz)				
.065	T O/F st 2	Time OFF	ms	500	500	500	50	10000

Underfrequency2					Conformity Range		Possible Range	
ID				Default	Min	Max	Min	Max
.067	U/F st 2	f_{THR} OFF	Hz	47.00	47.00	47.00	40.00	50.00
		f_{THR} ON	Hz	Fixed Hysteresis (0.05 Hz)				
.069	T U/F st 2	Time OFF	ms	500	500	500	50	10000

Frequency measuring in general					Conformity Range		Possible Range	
ID				Default	Min	Max	Min	Max
.113	F wnd	Window length	ms	Fixed window length 100ms				

Rate of Change of Frequency (RoCoF)					Conformity Range		Possible Range	
ID				Default	Min	Max	Min	Max
.090	RoCoF	Enable Function		off	on / off		on / off	
.091	RoCoF off	RoCoF$_{THR}$ OFF	mHz/s	200	190	210	100	1000
.092	RoCoF on	RoCoF$_{THR}$ ON	mHz/s	190	180	210	100	1000
		Time OFF	ms	Fixed to the fastest possible disconnection				
.111	RoCoF wnd	Window length	ms	Fixed window length 535ms				

Phase Shift (PShift)					Conformity Range		Possible Range	
ID				Default	Min	Max	Min	Max
.094	PShift	Enable Function		on	on / off		on / off	
.095	PShift off	PShift$_{THR}$ OFF	°	12.0	11.0	13.0	3.0	15.0
.096	PShift on	PShift$_{THR}$ ON	°	10.5	9.5	13.0	3.0	15.0
		Time OFF	ms	Fixed to the fastest possible disconnection				
.112	PShift wnd	Window length	ms	Fixed window length 200ms				

Auxiliary Contact type				Conformity Range		Possible Range	
ID			Default	Min	Max	Min	Max
.099	Contact	Type	dis. (disabled)	n.o. (normally opened) n.c. (normally closed) dis. (disabled)		n.o. (normally opened) n.c. (normally closed) dis. (disabled)	
.100	T Contact	Time OFF	ms	Fixed to 500ms			
.114	I3 STOP	Type	n.o. (normally opened)	n.o. (normally opened) n.c. (normally closed) dis. (disabled)		n.o. (normally opened) n.c. (normally closed) dis. (disabled)	

Turn-on delay					Conformity Range		Possible Range	
ID				Default	Min	Max	Min	Max
.102	Ton delay	Turn on time	s	20	20	20	0	900

Password					
ID			Default	Min	Max
.106	PW1	1st digit of Password	0	0	9
.107	PW2	2nd digit of Password	0	0	9
.108	PW3	3rd digit of Password	0	0	9
.109	PW4	4th digit of Password	0	0	9
Remark:		If all 4 digits of the Password are 0 (default setting) the Password request is skipped			

Device Information		
ID		
.105	ID: xxxxxxxxxx SW: aa.dd.ccb	xxxxxxxxxx = Device ID dd: Software version of Display Software aa: Software version of Measuring Software cc: Index of Configuration set

		b: Version of Configuration set

10.71 C10-11:2013 LV [ID 600] renewed standard

Connection Mode			Conformity Range	Possible Range
ID		Default		
.003	Connection	4-wire (LN)	2-wire, 3-wire, 4-wire (LN), 4-wire (LN+LL)	2-wire, 3-wire, 4-wire (LN), 4-wire (LN+LL)

Nominal Voltage					Conformity Range		Possible Range	
ID				Default	Min	Max	Min	Max
.005	ULN/LL nom	Unom Y	V	230.0	230.0	230.0	100.0	240.0
		Unom Δ	V	400.0	400.0	400.0	173.9	417.4

Functional Safety			Conformity Range	Possible Range
ID		Default		
.007	Errtol	Fixed to 1ch		
Remark:		1ch means: 1 channel without functional safety and 1 auxilliary contact1 necessary		

Overvoltage1 Line to Neutral					Conformity Range		Possible Range	
ID				Default	Min	Max	Min	Max
.019	U LN >	U_{THR} OFF	%Unom	110	100	110	100	135
		U_{THR} ON	%Unom	Fixed Hysteresis (0.5% U_{NOM})				
		Time OFF	ms	Fixed to fastest possible disconnection				
Comment:		U LN > has a fixed offset of 0.25% U_{NOM} subtracted from the displayed value						
Only active for:		Connection Modes: 2-wire, 4-wire (LN), 4-wire (LN+LL)						

Undervoltage1 Line to Neutral					Conformity Range		Possible Range	
ID				Default	Min	Max	Min	Max
.023	U LN <	U_{THR} OFF	%Unom	85	50	85	0	100
		U_{THR} ON	%Unom	Fixed Hysteresis (0.5% U_{NOM})				
.025	T U LN <	Time OFF	ms	1500	100	1500	100	10000

Comment:	U LN < has a fixed offset of 0.25% U_{NOM} added to the displayed value
Only active for:	Connection Modes: 2-wire, 4-wire (LN), 4-wire (LN+LL))

Undervoltage2 Line to Neutral					Conformity Range		Possible Range	
ID				Default	Min	Max	Min	Max
.039	U LN <<	U_{THR} OFF	%Unom	50	25	50	0	100
		U_{THR} ON	%Unom	Fixed Hysteresis (0.5% U_{NOM})				
		Time OFF	ms	Fixed to fastest possible disconnection				
Comment:		U LN << has a fixed offset of 0.25% U_{NOM} added to the displayed value						
Only active for:		Connection Modes: 2-wire, 4-wire (LN), 4-wire (LN+LL)						

Overfrequency1					Conformity Range		Possible Range	
ID				Default	Min	Max	Min	Max
.055	f >	f_{THR} OFF	Hz	51.50	50.00	51.50	50.00	55.00
		f_{THR} ON	Hz	Fixed reconnection frequency of 50.05Hz				
		Time OFF	ms	Fixed to fastest possible disconnection				
Comment:		f > has a fixed offset of 0.01 Hz subtracted from the displayed value						

Underfrequency1					Conformity Range		Possible Range	
ID				Default	Min	Max	Min	Max
.059	f < off	f_{THR} OFF	Hz	47.50	47.50	50.00	40.00	50.00
.060	f < on	f_{THR} ON	Hz	47.50	47.50	47.50	40.00	50.00
		Time OFF	ms	Fixed to fastest possible disconnection				
Comment:		f < on has a fixed offset of 0.02 Hz added to the displayed value						

Frequency measuring in general					Conformity Range		Possible Range	
ID				Default	Min	Max	Min	Max
.113	F wnd	Window length	ms	Fixed window length 100ms				

Rate of Change of Frequency (RoCoF)					Conformity Range		Possible Range	
ID				Default	Min	Max	Min	Max

.090	RoCoF	Enable Function		off	on / off		on / off	
.091	RoCoF off	RoCoF$_{THR}$ OFF	mHz/s	1000	1000	1000	100	2000
.092	RoCoF on	RoCoF$_{THR}$ ON	mHz/s	800	100	1000	100	1000
.093	RoCoF T	Time OFF	ms	0	0	100	0	1000
.111	RoCoF wnd	Window length	ms	Fixed window length 100ms				

Phase Shift (PShift)					Conformity Range		Possible Range	
ID				Default	Min	Max	Min	Max
.094	PShift	Enable Function		on	on / off		on / off	
.095	PShift off	PShift $_{THR}$ OFF	°	7	7	7	3	15
.096	PShift on	PShift $_{THR}$ ON	°	5	3	7	3	15
		Time OFF	ms	Fixed to the fastest possible disconnection				
.112	PShift wnd	Window length	ms	Fixed window length 100ms				
Comment:		PShift off has a fixed offset of 1° subtracted from the displayed value						

Auxiliary Contact type				Conformity Range		Possible Range	
ID			Default	Min	Max	Min	Max
.099	Contact	Type	dis. (disabled)	n.o. (normally opened) n.c. (normally closed) dis. (disabled)		n.o. (normally opened) n.c. (normally closed) dis. (disabled)	
.100	T Contact	Time OFF	ms	Fixed to 500ms			
.114	I3 STOP	Type	n.o. (normally opened)	n.o. (normally opened) n.c. (normally closed) dis. (disabled)		n.o. (normally opened) n.c. (normally closed) dis. (disabled)	

Turn-on delay					Conformity Range		Possible Range	
ID				Default	Min	Max	Min	Max
.102	Ton delay	Turn on time	s	60	60	60	0	900

Password					
ID			Default	Min	Max
.106	PW1	1st digit of Password	0	0	9
.107	PW2	2nd digit of Password	0	0	9
.108	PW3	3rd digit of Password	0	0	9
.109	PW4	4th digit of Password	0	0	9
Remark:		If all 4 digits of the Password are 0 (default setting) the Password request is skipped			

Device Information		
ID		
.105	ID: xxxxxxxxxx SW: aa.dd.ccb	xxxxxxxxxx = Device ID dd: Software version of Display Software aa: Software version of Measuring Software cc: Index of Configuration set b: Version of Configuration set

10.72 C10-11:2013 MV [ID 650] renewed standard

Connection Mode			Conformity Range	Possible Range
ID		Default		
.003	Connection	3-wire	3-wire	2-wire, 3-wire, 4-wire (LN), 4-wire (LN+LL)

Nominal Voltage					Conformity Range		Possible Range	
ID				Default	Min	Max	Min	Max
.005	ULN/LL nom	Unom Y	V	230.0	230.0	230.0	28.8	241.4
		Unom Δ	V	400.0	400.0	400.0	50.0	420.0

Functional Safety			Conformity Range	Possible Range
ID		Default		
.007	Errtol	Fixed to 1ch		

Remark:	1ch means: 1 channel without functional safety and 1 auxilliary contact1 necessary

Overvoltage1 Line to Line					Conformity Range		Possible Range	
ID				Default	Min	Max	Min	Max
.011	U LL >	UTHR OFF	%Unom	110	100	110	100	135
		UTHR ON	%Unom	Fixed Hysteresis (0.5% UNOM)				
		Time OFF	ms	Fixed to fastest possible disconnection				
Comment:		U LL > has a fixed offset of 0.25% UNOM subtracted from the displayed value						
Only active for:		Connection Modes: 3-wire, 4-wire (LN+LL)						

Undervoltage1 Line to Line					Conformity Range		Possible Range	
ID				Default	Min	Max	Min	Max
.015	U LL <	UTHR OFF	%Unom	85	50	85	0	100
		UTHR ON	%Unom	Fixed Hysteresis (0.5% UNOM)				
.017	T ULL <	Time OFF	ms	1500	100	1500	100	10000
Comment:		U LL < has a fixed offset of 0.25% UNOM added to the displayed value						
Only active for:		Connection Modes: 3-wire, 4-wire (LN+LL)						

Undervoltage2 Line to Line					Conformity Range		Possible Range	
ID				Default	Min	Max	Min	Max
.031	U LL <<	UTHR OFF	%Unom	50	25	50	0	100
		UTHR ON	%Unom	Fixed Hysteresis (0.5% UNOM)				
		Time OFF	ms	Fixed to fastest possible disconnection				
Comment:		U LL << has a fixed offset of 0.25% UNOM added to the displayed value						
Only active for:		Connection Modes: 3-wire, 4-wire (LN+LL)						

Overfrequency1					Conformity Range		Possible Range	
ID				Default	Min	Max	Min	Max
.055	f >	fTHR OFF	Hz	51.50	50.00	51.50	50.00	55.00
		fTHR ON	Hz	Fixed reconnection frequency of 50.05Hz				
		Time OFF	ms	Fixed to fastest possible disconnection				

Comment:	f > has a fixed offset of 0.01 Hz subtracted from the displayed value

Underfrequency1					Conformity Range		Possible Range	
ID				Default	Min	Max	Min	Max
.059	f < off	f_{THR} OFF	Hz	47.50	47.50	50.00	40.00	50.00
.060	f < on	f_{THR} ON	Hz	47.50	47.50	47.50	40.00	50.00
		Time OFF	ms	Fixed to fastest possible disconnection				
Comment:	f < on has a fixed offset of 0.02 Hz added to the displayed value							

Frequency measuring in general					Conformity Range		Possible Range	
ID				Default	Min	Max	Min	Max
.113	F wnd	Window length	ms	Fixed window length 100ms				

Rate of Change of Frequency (RoCoF)					Conformity Range		Possible Range	
ID				Default	Min	Max	Min	Max
.090	RoCoF	Enable Function		off	on / off		on / off	
.091	RoCoF off	$RoCoF_{THR}$ OFF	mHz/s	1000	1000	1000	100	2000
.092	RoCoF on	$RoCoF_{THR}$ ON	mHz/s	800	100	1000	100	1000
.093	RoCoF T	Time OFF	ms	0	0	100	0	1000
.111	RoCoF wnd	Window length	ms	Fixed window length 100ms				

Phase Shift (PShift)					Conformity Range		Possible Range	
ID				Default	Min	Max	Min	Max
.094	PShift	Enable Function		on	on / off		on / off	
.095	PShift off	$PShift_{THR}$ OFF	°	7	7	7	3	15
.096	PShift on	$PShift_{THR}$ ON	°	5	3	7	3	15
		Time OFF	ms	Fixed to the fastest possible disconnection				
.112	PShift wnd	Window length	ms	Fixed window length 100ms				
Comment:	PShift off has a fixed offset of 1° subtracted from the displayed value							

Auxiliary Contact type	Conformity Range	Possible Range

ID			Default	Min	Max	Min	Max
.099	Contact	Type	dis. (disabled)	n.o. (normally opened) n.c. (normally closed) dis. (disabled)		n.o. (normally opened) n.c. (normally closed) dis. (disabled)	
.100	T Contact	Time OFF	ms	Fixed to 270ms			
.114	I3 STOP	Type	n.o. (normally opened)	n.o. (normally opened) n.c. (normally closed) dis. (disabled)		n.o. (normally opened) n.c. (normally closed) dis. (disabled)	

Turn-on delay					Conformity Range		Possible Range	
ID				Default	Min	Max	Min	Max
.102	Ton delay	Turn on time	s	60	60	60	0	900

Password					
ID			Default	Min	Max
.106	PW1	1st digit of Password	0	0	9
.107	PW2	2nd digit of Password	0	0	9
.108	PW3	3rd digit of Password	0	0	9
.109	PW4	4th digit of Password	0	0	9
Remark:		If all 4 digits of the Password are 0 (default setting) the Password request is skipped			

Device Information		
ID		
.105	ID: xxxxxxxxxx	xxxxxxxxxx = Device ID
	SW: aa.dd.ccb	dd: Software version of Display Software aa: Software version of Measuring Software cc: Index of Configuration set b: Version of Configuration set

10.73 C10-11:2019 LV-IP [ID 601] Interface Protection low voltage

Connection Mode			Conformity Range	Possible Range
ID		Default		
.003	Connection	4-wire (LN)	4-wire (LN)	2-wire, 3-wire, 4-wire (LN), 4-wire (LN+LL)

Nominal Voltage					Conformity Range		Possible Range	
ID				Default	Min	Max	Min	Max
.005	ULN/LL nom	Unom Y	V	230.0	230.0	240.0	100.0	240.0
		Unom Δ	V	400.0	400.0	417.4	173.9	417.4

Functional Safety			Conformity Range	Possible Range
ID		Default		
.007	Errtol	Fixed to 1ch		
Remark:		1ch means: 1 channel without functional safety and 1 auxilliary contact1 necessary		

Overvoltage1 Line to Neutral					Conformity Range		Possible Range	
ID				Default	Min	Max	Min	Max
.019	U LN > off	UTHR OFF	%Unom	110	100	110	100	135
.020	U LN > on	UTHR ON	%Unom	109	100	120	100	135
.021	T U LN >	Time OFF	ms	1000	0	3000	0	10000
Comment:		U LN > off has a fixed offset of 0.25% UNOM subtracted from the displayed value						
Only active for:		Connection Modes: 2-wire, 4-wire (LN), 4-wire (LN+LL)						

Undervoltage1 Line to Neutral					Conformity Range		Possible Range	
ID				Default	Min	Max	Min	Max
.023	U LN < off	UTHR OFF	%Unom	70	50	85	0	100
.024	U LN < on	UTHR ON	%Unom	85	50	100	0	100
.025	T U LN <	Time OFF	ms	1500	0	1500	0	10000
Comment:		U LN < off has a fixed offset of 0.25% UNOM added to the displayed value						
Only active for:		Connection Modes: 2-wire, 4-wire (LN), 4-wire (LN+LL))						

Overvoltage2 Line to Neutral					Conformity Range		Possible Range	
ID				Default	Min	Max	Min	Max
.035	U LN>> off	U_{THR} OFF	%Unom	115	100	130	100	135
.036	U LN>> on	U_{THR} ON	%Unom	114	100	120	100	135
		Time OFF	ms	Fixed to fastest possible disconnection				
Comment:		U LN > off has a fixed offset of 0.25% U_{NOM} subtracted from the displayed value						
Only active for:		Connection Modes: 2-wire, 4-wire (LN), 4-wire (LN+LL)						

Undervoltage2 Line to Neutral					Conformity Range		Possible Range	
ID				Default	Min	Max	Min	Max
.039	U LN<< off	U_{THR} OFF	%Unom	25	25	50	0	100
.040	U LN<< on	U_{THR} ON	%Unom	85	50	100	0	100
		Time OFF	ms	Fixed to fastest possible disconnection				
Comment:		U LN < off has a fixed offset of 0.25% U_{NOM} added to the displayed value						
Only active for:		Connection Modes: 2-wire, 4-wire (LN), 4-wire (LN+LL)						

Overfrequency1					Conformity Range		Possible Range	
ID				Default	Min	Max	Min	Max
.055	f > off	f_{THR} OFF	Hz	51.50	51.50	51.50	50.00	55.00
.056	f > on	f_{THR} ON	Hz	50.10	50.00	52.00	50.00	55.00
		Time OFF	ms	Fixed to fastest possible disconnection				
Comment:		f > off has a fixed offset of 0.01 Hz subtracted to the displayed value						
Only active for:		Voltage > 20% U_{NOM}						

Underfrequency1					Conformity Range		Possible Range	
ID				Default	Min	Max	Min	Max
.059	f < off	f_{THR} OFF	Hz	47.50	47.50	47.50	40.00	50.00
.060	f < on	f_{THR} ON	Hz	49.90	47.00	50.00	40.00	50.00
		Time OFF	ms	Fixed to fastest possible disconnection				
Comment:		f < off has a fixed offset of 0.01 Hz added to the displayed value						

Only active for:	Voltage > 20% U_{NOM}

Frequency measuring in general					Conformity Range		Possible Range	
ID				Default	Min	Max	Min	Max
.113	F wnd	Window length	ms	Fixed window length 100ms				

Rate of Change of Frequency (RoCoF)					Conformity Range		Possible Range	
ID				Default	Min	Max	Min	Max
.090	RoCoF	Enable Function		off	on / off		on / off	
.091	RoCoF off	RoCoF_{THR} OFF	mHz/s	1000	1000	1000	100	2000
.092	RoCoF on	RoCoF_{THR} ON	mHz/s	800	100	1000	100	1000
.093	RoCoF t	Time OFF	ms	0	0	0	0	1000
.111	RoCoF wnd	Window length	ms	Fixed window length 100ms				

Phase Shift (PShift)					Conformity Range		Possible Range	
ID				Default	Min	Max	Min	Max
.094	PShift	Enable Function		on	on / off		on / off	
.095	PShift off	PShift_{THR} OFF	°	7	7	7	3	15
.096	PShift on	PShift_{THR} ON	°	5	3	7	3	15
		Time OFF	ms	Fixed to the fastest possible disconnection				
.112	PShift wnd	Window length	ms	Fixed window length 100ms				
Comment:	PShift off has a fixed offset of 1° subtracted from the displayed value							

Auxiliary Contact type					Conformity Range		Possible Range	
ID			Default		Min	Max	Min	Max
.099	Contact	Type	dis. (disabled)		n.o. (normally opened) n.c. (normally closed) dis. (disabled)		n.o. (normally opened) n.c. (normally closed) dis. (disabled)	
.100	Contact t	Time OFF	ms	300	100	300	10	5000
.114	I3 STOP	Type	n.o. (normally opened)		n.o. (normally opened)		n.o. (normally opened)	

				n.c. (normally closed) dis. (disabled)	n.c. (normally closed) dis. (disabled)

Turn-on delay					Conformity Range		Possible Range	
ID				Default	Min	Max	Min	Max
.102	Ton delay	Turn on time	s	60	60	60	0	900

Password					
ID			Default	Min	Max
.106	PW1	1st digit of Password	0	0	9
.107	PW2	2nd digit of Password	0	0	9
.108	PW3	3rd digit of Password	0	0	9
.109	PW4	4th digit of Password	0	0	9
Remark:		If all 4 digits of the Password are 0 (default setting) the Password request is skipped			

Device Information		
ID		
.105	ID: xxxxxxxxxx SW: aa.dd.ccb	xxxxxxxxxx = Device ID dd: Software version of Display Software aa: Software version of Measuring Software cc: Index of Configuration set b: Version of Configuration set

10.74 C10-11:2019 HV-IP [ID 651] Interface Protection / High Voltage

Connection Mode			Conformity Range	Possible Range
ID		Default		
.003	Connection	3-wire	3-wire	2-wire, 3-wire, 4-wire (LN), 4-wire (LN+LL)

Nominal Voltage	Conformity Range	Possible Range

ID				Default	Min	Max	Min	Max
.005	ULN/LL nom	Unom Y	V	230.0	57.5	230.0	28.8	241.4
		Unom Δ	V	400.0	100.0	400.0	50.0	420.0

Functional Safety			Conformity Range	Possible Range
ID		Default		
.007	Errtol	Fixed to 1ch		
Remark:		1ch means: 1 channel without functional safety and 1 auxilliary contact1 necessary		

Overvoltage1 Line to Line					Conformity Range		Possible Range	
ID				Default	Min	Max	Min	Max
.011	U LL > off	UTHR OFF	%Unom	110	100	110	100	135
.012	U LL > on	UTHR ON	%Unom	109	100	120	100	135
.013	T U LL >	Time OFF	ms	1000	0	3000	0	10000
Comment:		U LL > off has a fixed offset of 0.25% UNOM subtracted from the displayed value						
Only active for:		Connection Modes: 3-wire, 4-wire (LN+LL)						

Undervoltage1 Line to Line					Conformity Range		Possible Range	
ID				Default	Min	Max	Min	Max
.015	U LL < off	UTHR OFF	%Unom	70	50	85	0	100
.016	U LL < on	UTHR ON	%Unom	90	50	100	0	100
.017	T U LL <	Time OFF	ms	1500	0	1500	0	10000
Comment:		U LL < off has a fixed offset of 0.25% UNOM added to the displayed value						
Only active for:		Connection Modes: 3-wire, 4-wire (LN+LL)						

Overvoltage2 Line to Line					Conformity Range		Possible Range	
ID				Default	Min	Max	Min	Max
.027	U LL>> off	UTHR OFF	%Unom	115	100	130	100	135
.028	U LL>> on	UTHR ON	%Unom	114	100	120	100	135
		Time OFF	ms	Fixed to fastest possible disconnection				
Comment:		U LL>> off has a fixed offset of 0.25% UNOM subtracted from the displayed value						

Only active for:	Connection Modes: 3-wire, 4-wire (LN+LL)

Undervoltage2 Line to Line					Conformity Range		Possible Range	
ID				Default	Min	Max	Min	Max
.031	U LL<< off	U_{THR} OFF	%Unom	25	25	50	0	100
.032	U LL<< on	U_{THR} ON	%Unom	90	50	100	0	100
		Time OFF	ms	Fixed to fastest possible disconnection				
Comment:		U LL<< off has a fixed offset of 0.25% U_{NOM} added to the displayed value						
Only active for:		Connection Modes: 3-wire, 4-wire (LN+LL)						

Overfrequency1					Conformity Range		Possible Range	
ID				Default	Min	Max	Min	Max
.055	f > off	f_{THR} OFF	Hz	51.50	51.50	51.50	50.00	55.00
.056	f > on	f_{THR} ON	Hz	50.10	50.00	52.00	50.00	55.00
		Time OFF	ms	Fixed to fastest possible disconnection				
Comment:		f > off has a fixed offset of 0.01 Hz subtracted to the displayed value						
Only active for:		Voltage > 20% U_{NOM}						

Underfrequency1					Conformity Range		Possible Range	
ID				Default	Min	Max	Min	Max
.059	f < off	f_{THR} OFF	Hz	47.50	47.50	47.50	40.00	50.00
.060	f < on	f_{THR} ON	Hz	49.90	47.00	50.00	40.00	50.00
		Time OFF	ms	Fixed to fastest possible disconnection				
Comment:		f < off has a fixed offset of 0.01 Hz added to the displayed value						
Only active for:		Voltage > 20% U_{NOM}						

Frequency measuring in general					Conformity Range		Possible Range	
ID				Default	Min	Max	Min	Max
.113	F wnd	Window length	ms	Fixed window length 100ms				

Rate of Change of Frequency (RoCoF)	Conformity Range	Possible Range

ID				Default	Min	Max	Min	Max
.090	RoCoF	Enable Function		off	on / off		on / off	
.091	RoCoF off	RoCoF$_{THR}$ OFF	mHz/s	1000	1000	1000	100	2000
.092	RoCoF on	RoCoF$_{THR}$ ON	mHz/s	800	100	1000	100	1000
.093	RoCoF t	Time OFF	ms	0	0	0	0	1000
.111	RoCoF wnd	Window length	ms	Fixed window length 100ms				

Phase Shift (PShift)					Conformity Range		Possible Range	
ID				Default	Min	Max	Min	Max
.094	PShift	Enable Function		on	on / off		on / off	
.095	PShift off	PShift $_{THR}$ OFF	°	7	7	7	3	15
.096	PShift on	PShift $_{THR}$ ON	°	5	3	7	3	15
		Time OFF	ms	Fixed to the fastest possible disconnection				
.112	PShift wnd	Window length	ms	Fixed window length 100ms				
Comment:		PShift off has a fixed offset of 1° subtracted from the displayed value						

Auxiliary Contact type					Conformity Range		Possible Range	
ID			Default		Min	Max	Min	Max
.099	Contact	Type	dis. (disabled)		n.o. (normally opened) n.c. (normally closed) dis. (disabled)		n.o. (normally opened) n.c. (normally closed) dis. (disabled)	
.100	Contact t	Time OFF	ms	300	100	300	10	5000
.114	I3 STOP	Type	n.o. (normally opened)		n.o. (normally opened) n.c. (normally closed) dis. (disabled)		n.o. (normally opened) n.c. (normally closed) dis. (disabled)	

Turn-on delay					Conformity Range		Possible Range	
ID				Default	Min	Max	Min	Max
.102	Ton delay	Turn on time	s	60	60	60	0	900

Password					
ID			Default	Min	Max
.106	PW1	1st digit of Password	0	0	9
.107	PW2	2nd digit of Password	0	0	9
.108	PW3	3rd digit of Password	0	0	9
.109	PW4	4th digit of Password	0	0	9
Remark:		If all 4 digits of the Password are 0 (default setting) the Password request is skipped			

Device Information		
ID		
.105	ID: xxxxxxxxxx	xxxxxxxxxx = Device ID
	SW: aa.dd.ccb	dd: Software version of Display Software aa: Software version of Measuring Software cc: Index of Configuration set b: Version of Configuration set

PROTECTION MADE SIMPLE.

Professional Line

XUFD

MANUAL

docs.SEGelectronics.de/xufd

SEG Electronics GmbH reserves the right to update any portion of this publication at any time.
Information provided by SEG Electronics GmbH is believed to be correct and reliable.
However, SEG Electronics GmbH assumes no responsibility unless otherwise expressly undertaken.

SEG Electronics GmbH
Krefelder Weg 47 • D–47906 Kempen (Germany)
Telephone: +49 (0) 21 52 145 1
Internet: www.SEGelectronics.de

Sales
Telephone: +49 (0) 21 52 145 331
Fax: +49 (0) 21 52 145 354
E-mail: sales@SEGelectronics.de

Service
Telephone: +49 (0) 21 52 145 600
Fax: +49 (0) 21 52 145 354
E-mail: support@SEGelectronics.de

Complete address / phone / fax / email information for all locations is available on our website.